CCD-TRV63/TRV66/TRV66PK

RMT-708

SERVICE MANUAL

Self Diagnosis Supported model

Ver 1.0 1998.12

Handycam Vision™

video Hi8 XR

InfoLITHIUM

Photo: CCD-TRV66

US Model
Hong Kong Model
Brazilian Model
CCD-TRV66

Canadian Model
CCD-TRV63/TRV66

E Model
CCD-TRV66/TRV66PK

B MECHANISM

• The CCD-TRV66PK is made by combining the CCD-TRV66 (E model), carrying bag.

For MECHANISM ADJUSTMENT, refer to the "8mm Video MECHANICAL ADJUSTMENT MANUAL Ⅶ" (9-973-801-11).

SPECIFICATIONS

Video camera recorder

System

Video recording system
2 rotary heads
Helical scanning FM system
Audio recording system
Rotary heads, FM system
Video signal
NTSC color, EIA standards
Usable cassette
8mm video format cassette
Hi8 or standard 8
Recording/playback time (using cassette E6/P6-120)
SP mode: 2 hours
LP mode: 4 hours
Fastforward/rewind time (using cassette E6/P6-120)
Approx. 8 min.
Image device
1/4 inch CCD (Charge Coupled Device)
Approx. 470,000 pixels
(Effective: Approx. 300,000 pixels)
Lens
Combined power zoom lens
Filter diameter 1 7/16 in. (37 mm)
20× (Optical), 360× (Digital)
Focal distance
5/32 - 2 7/8 in. (3.6 - 72 mm)
When converted to a 35 mm still camera
1 5/8 - 32 3/8 in. (41 - 820 mm)
Color temperature
Auto
Minimum illumination
0.7 lux (F 1.4)
0 lux (in the NightShot mode)*
* Objects unable to be seen due to the dark can be shot with infrared lighting.

Input and output connectors

S video input/output
4-pin mini DIN
Luminance signal: 1 Vp-p, 75 ohms, unbalanced
Chrominance signal: 0.286 Vp-p, 75 ohms, unbalanced
Video input/output
Phono jack, 1 Vp-p, 75 ohms, unbalanced
Audio input/output
Phono jacks (2: stereo L and R)
327 mV, (at output impedance 47 kilohms) impedance less than 2.2 kilohms
RFU DC OUT
Special minijack, DC 5V
Headphone jack
Stereo minijack (ø 3.5 mm)
LANC control jack
Stereo mini-minijack (ø 2.5 mm)
MIC jack
Minijack, 0.388 mV low impedance with 2.5 to 3.0 V DC, output impedance 6.8 kilohms (ø 3.5 mm)
Stereo type

LCD screen

Picture
2.5 inches measured diagonally
2 × 1 1/2 in. (50.3 × 37.4 mm)
Total dot number
61,380 (279 × 220)

General

Power requirements
7.2 V (battery pack)
8.4 V (AC power adaptor)
Average power consumption (when using the battery pack)
During camera recording using LCD
2.8 W
Viewfinder
2.3 W
Operating temperature
32 °F to 104 °F (0 °C to 40 °C)
Storage temperature
–4 °F to +140 °F (–20 °C to +60 °C)
Dimensions (Approx.)
4 1/8 × 4 1/4 × 8 3/8 in.
(102 × 106 × 212 mm) (w/h/d)
Mass (approx.)
1 lb 14 oz (870 g)
excluding the battery pack, lithium battery, cassette and shoulder strap
2 lb 3 oz (1.0 kg)
including the battery pack NP-F330, lithium battery CR2025, cassette E6/P6-120 and shoulder strap
Supplied accessories
See page 2.

AC power adaptor

Power requirements
100 - 240 V AC, 50/60 Hz
Power consumption
23 W
Output voltage
DC OUT: 8.4 V, 1.5 A in operating mode
Operating temperature
32 °F to 104 °F (0 °C to 40 °C)
Storage temperature
–4 °F to +140 °F (–20 °C to +60 °C)
Dimensions (approx.)
5 × 1 9/16 × 2 1/2 in.
(125 × 39 × 62 mm) (w/h/d)
excluding projecting parts
Mass (approx.)
9.8 oz (280 g)
excluding power cord
Cord length (approx.)
AC power cord: 6.6 feet (2 m)
Connecting cord: 5.2 feet (1.6 m)

Design and specifications are subject to change without notice.

Hi8 VIDEO CAMERA RECORDER

MICROFILM

SONY®

Supplied accessories

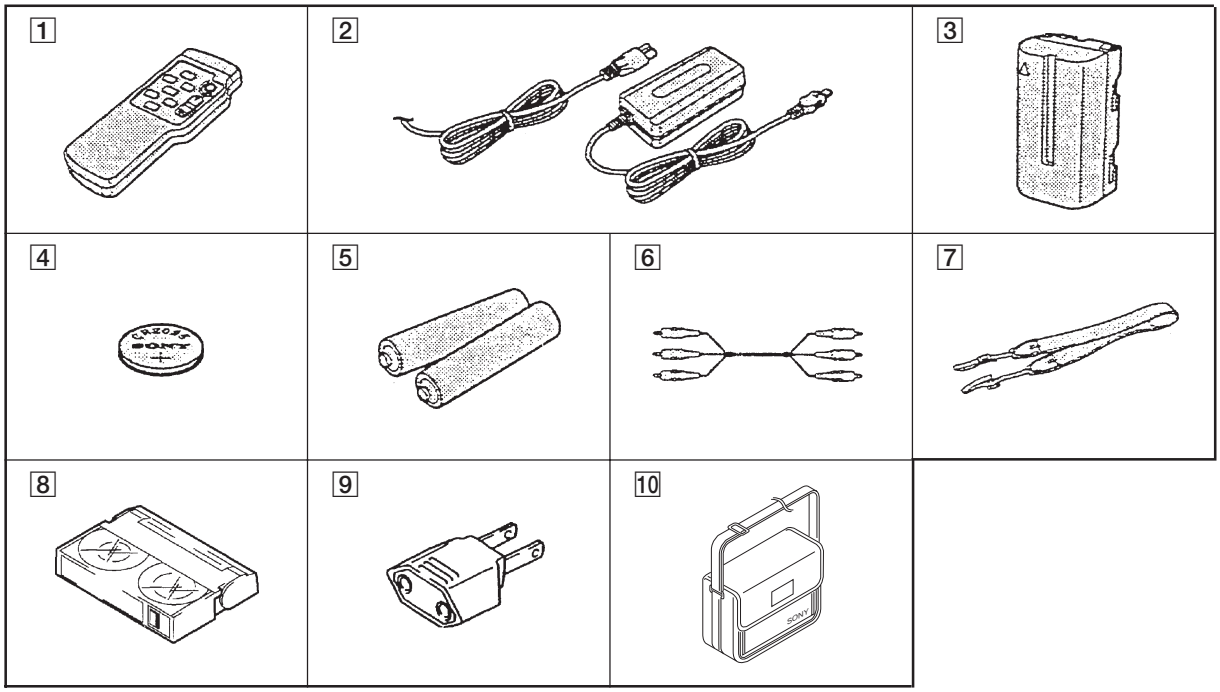

1 **Wireless Remote Commander (1)**

2 **AC-L10A/L10B/L10C AC power adaptor (1), Power cord (1)**

3 **NP-F330 Battery pack (1)**

4 **CR2025 Lithium Battery (1)**
The lithium battery is already installed in your camcorder.

5 **Size AA (R6) battery for Remote Commander (2)**

6 **A/V connecting cable (1)**

7 **Shoulder strap (1)**

8 **8mm tape (How to take)**
CCD-TRV66 : US only

9 **2 pin conversion adaptor (1)**
CCD-TRV66 : E, HK, BR/TRV66PK

10 **Carrying bag**
CCD-TRV66PK only

- Abbreviation
  HK : Hong Kong Model
  BR : Brazilian Model

SAFETY-RELATED COMPONENT WARNING!!

COMPONENTS IDENTIFIED BY MARK ⚠ OR DOTTED LINE WITH MARK ⚠ ON THE SCHEMATIC DIAGRAMS AND IN THE PARTS LIST ARE CRITICAL TO SAFE OPERATION. REPLACE THESE COMPONENTS WITH SONY PARTS WHOSE PART NUMBERS APPEAR AS SHOWN IN THIS MANUAL OR IN SUPPLEMENTS PUBLISHED BY SONY.

ATTENTION AU COMPOSANT AYANT RAPPORT À LA SÉCURITÉ!

LES COMPOSANTS IDENTIFÉS PAR UNE MARQUE ⚠ SUR LES DIAGRAMMES SCHÉMATIQUES ET LA LISTE DES PIÈCES SONT CRITIQUES POUR LA SÉCURITÉ DE FONCTIONNEMENT. NE REMPLACER CES COMPOSANTS QUE PAR DES PIÈSES SONY DONT LES NUMÉROS SONT DONNÉS DANS CE MANUEL OU DANS LES SUPPÉMENTS PUBLIÉS PAR SONY.

SAFETY CHECK-OUT

After correcting the original service problem, perform the following safety checks before releasing the set to the customer.

1. Check the area of your repair for unsoldered or poorly-soldered connections. Check the entire board surface for solder splashes and bridges.
2. Check the interboard wiring to ensure that no wires are "pinched" or contact high-wattage resistors.
3. Look for unauthorized replacement parts, particularly transistors, that were installed during a previous repair. Point them out to the customer and recommend their replacement.
4. Look for parts which, through functioning, show obvious signs of deterioration. Point them out to the customer and recommend their replacement.
5. Check the B+ voltage to see it is at the values specified.
6. Flexible Circuit Board Repairing
   - Keep the temperature of the soldering iron around 270˚C during repairing.
   - Do not touch the soldering iron on the same conductor of the circuit board (within 3 times).
   - Be careful not to apply force on the conductor when soldering or unsoldering.

TABLE OF CONTENTS

SERVICE NOTE

1. POWER SUPPLY DURING REPAIRS ····· 6
2. TO TAKE OUT A CASSETTE WHEN NOT EJECT (FORCE EJECT) ····· 6

SELF-DIAGNOSIS FUNCTION

1. Self-diagnosis Function ····· 7
2. Self-diagnosis Display ····· 7
3. Service Mode Display ····· 7
3-1. Display Method ····· 7
3-2. Switching of Backup No. ····· 7
3-3. End of Display ····· 7
4. Self-dignosis Code Table ····· 8

1. GENERAL

Quick Start Guide ····· 1-1
Getting Started ····· 1-1
- Using this manual ····· 1-1
- Checking supplied accessories ····· 1-1
- Step 1: Preparing the power supply ····· 1-2
- Step 2: Inserting a cassette ····· 1-3

Recording – Basics ····· 1-3
- Recording a picture ····· 1-3
- Checking the recording – END SEARCH/EDITSEARCH/Rec Review ····· 1-5

Playback – Basics ····· 1-5
- Playing back a tape ····· 1-5
- Viewing the recording on TV ····· 1-6

Advanced Recording Operations ····· 1-6
- Photo recording ····· 1-6
- Using the wide mode ····· 1-7
- Using the fader function ····· 1-7
- Using special effects – Picture effect ····· 1-8
- Using special effects – Digital effect ····· 1-8
- Using the PROGRAM AE function ····· 1-9
- Adjusting the exposure manually ····· 1-10
- Focusing manually ····· 1-10
- Superimposing a title ····· 1-10
- Making your own titles ····· 1-11
- Using the built-in light ····· 1-11

Advanced Playback Operations ····· 1-12
- Playing back a tape with digital effects ····· 1-12

Editing on Other Equipment ····· 1-12
- Dubbing a tape ····· 1-12
- Recording video or TV programs ····· 1-12

Customizing Your Camcorder ····· 1-12
- Changing the MENU settings ····· 1-12
- Resetting the date and time ····· 1-14

Additional Information ····· 1-14
- Usable cassettes and playback modes ····· 1-14
- Changing the lithium battery in your camcorder ····· 1-15
- Troubleshooting ····· 1-15
- Self-diagnosis display ····· 1-16
- Warning indicators and messages ····· 1-16
- Using your camcorder abroad ····· 1-17
- Maintenance information and precautions ····· 1-17

Quick Reference ····· 1-18
- Identifying the parts and controls ····· 1-18
- Quick Function Guide ····· 1-20

2. DISASSEMBLY

2-1. Mechanism Deck ····· 2-2
2-2. LCD Unit, PD-105 Board ····· 2-3
2-3. Lens Block ····· 2-4
2-4. EVF Block, VF-129 Board ····· 2-5
2-5. Mechanism Deck, VC-214, DD-117 Boards ····· 2-6
2-6. Video Light ····· 2-7
2-7. CF-56 Board ····· 2-7
2-8. How to Identify Drum and Note ····· 2-8
2-9. Circuit Boards Location ····· 2-9
2-10. Flexible Boards Location ····· 2-10

3. BLOCK DIAGRAMS

3-1. Overall Block Diagram ····· 3-1
3-2. Camera/Video Block Diagram ····· 3-5
3-3. VTR/Camera Control Block Diagram ····· 3-9
3-4. Servo Block Diagram ····· 3-11
3-5. Mode Control Block Diagram ····· 3-15
3-6. Audio Block Diagram ····· 3-17
3-7. LCD Block Diagram ····· 3-19
3-8. EVF Block Diagram ····· 3-21
3-9. Power Block Diagram ····· 3-23

4. PRINTED WIRING BOARDS AND SCHEMATIC DIAGRAMS

4-1. Frame Schematic Diagram-1 ····· 4-1
4-2. Frame Schematic Diagram-2 ····· 4-3
4-3. Printed Wiring Boards and Schematic Diagrams ····· 4-7
- CD-209 (CCD Imager) Printed Wiring Board and Schematic Diagram ····· 4-8
- VC-214 (Camera Processor, Y/C Processor, Focus/Zoom Motor Drive, REC/PB Head AMP, Video/Interface, IR Transmitter, Mode Control, System Control, Servo, HI Control, Audio Processor) Printed Wiring Board ····· 4-11
- VC-214 (Camera Processor)(1/10) Schematic Diagram ····· 4-17
- VC-214 (Y/C Processor)(2/10) Schematic Diagram ····· 4-19
- VC-214 (Focus/Zoom Motor Drive)(3/10) Schematic Diagram ····· 4-25
- VC-214 (REC/PB Head AMP)(4/10) Schematic Diagram ····· 4-27
- VC-214 (Video/Interface)(5/10) Schematic Diagram ····· 4-31
- VC-214 (IR Transmitter)(6/10) Schematic Diagram ····· 4-33
- VC-214 (Mode Control)(7/10) Schematic Diagram ····· 4-36
- VC-214 (Servo)(8/10) Schematic Diagram ····· 4-39
- FP-249 (S/T Reel Sensor), FP-356 (Top Sensor), FP-355 (Tape LED) Flexible Board Printed Wiring Boards ····· 4-42
- VL-23 (Video Light) Printed Wiring Board ····· 4-43
- VC-214 (HI Control)(9/10) Schematic Diagram ····· 4-44
- VC-214 (Audio)(10/10) Schematic Diagram ····· 4-47
- SE-83 (Steady Shot), PJ-92 (AV IN/OUT) Printed Wiring Boards ····· 4-50
- SE-83 (Steady Shot), PJ-92 (AV IN/OUT) Schematic Diagrams ····· 4-53
- MA-351 (Stereo MIC AMP, Laser Link) Printed Wiring Board ····· 4-55
- MA-351 (Stereo MIC AMP, Laser Link) Schematic Diagram ····· 4-57
- PD-105 (RGB Decoder, LCD, Timing Generator, Back Light Drive) Printed Wiring Board ····· 4-60

• PD-105 (RGB Decoder, LCD)(1/2)
Schematic Diagram ····· 4-63
• PD-105 (Timing Generator, Back Light Drive)(2/2)
Schematic Diagram ····· 4-67
• VF-129 (B/W EVF)
Printed Wiring Board and
Schematic Diagram 4-69
• CF-56 (User Control)
Printed Wiring Board 4-72
• CF-56 (User Control)
Schematic Diagram ····· 4-73
• DD-117 (DC/DC Converter)
Printed Wiring Board ····· 4-79
• DD-117 (DC/DC Converter)
Schematic Diagram ····· 4-81
• FK-8500, SS-8500 (Control Switch Block)
Schematic Diagram ····· 4-83

5. ADJUSTMENTS

5-1. CAMERA SECTION ADJUSTMENT ····· 5-1
1-1. Preparations before Adjustment (Camera Section) ····· 5-1
1-1-1. List of Service Tools ····· 5-1
1-1-2. Adjusting Items When Replacing Main Parts ····· 5-2
1-1-3. Preparations ····· 5-3
1-1-4. Precaution ····· 5-3
1. Setting the Switch ····· 5-5
2. Order of Adjustments ····· 5-5
3. Subjects ····· 5-5
1-2. Initialization of D, E, F Page Data ····· 5-6
1. Initializing the D, E, F Page Data ····· 5-6
2. Modification of D, E, F Page Data ····· 5-6
3. D Page Table ····· 5-6
4. F Page Table ····· 5-7
5. E Page Table ····· 5-10
1-3. Camera System Adjustments ····· 5-13
1. HALL Adjustment ····· 5-13
2. Flange Back Adjustment ····· 5-13
2-1. Flange Back Adjustment (1) ····· 5-13
2-2. Flange Back Adjustment (2) ····· 5-14
3. Flange Back Check ····· 5-14
4. Picture Frame Setting ····· 5-15
5. AGC Gain Calibration Adjustment ····· 5-15
6. Color Reproduction Adjustment ····· 5-16
7. IRIS IN/OUT Adjustment ····· 5-16
8. MAX GAIN Adjustment ····· 5-17
9. Auto White Balance Standard Data Input ····· 5-17
10. Auto White Balance Adjustment ····· 5-18
11. White Balance Check ····· 5-19
12. Angular Velocity Sensor Sensitivity Preset and
Steady Shot Check ····· 5-20
1-4. Monochrome Electronic Viewfinder System
Adjustment ····· 5-21
1-4-1. Horizontal Slant Check ····· 5-21
1-4-2. Centering Adjustment ····· 5-21
1-4-3. Focus Adjustment ····· 5-21
1-4-4. Aberration Adjustment ····· 5-22
1-4-5. Horizontal Amplitude Adjustment (VF-129 board) ····· 5-22
1-4-6. Vertical Amplitude Adjustment (VF-129 board) ····· 5-23
1-4-7. Brightness Adjustment (VF-129 Board) ····· 5-23
1-4-8. Horizontal Amplitude, Vertical Amplitude,
Focus Check ····· 5-24
1-5. LCD System Adjustment ····· 5-24
1. LCD Initial Data Input ····· 5-24
2. VCO Adjustment (PD-105 board) ····· 5-25
3. D range Adjustment (PD-105 board) ····· 5-25
4. Bright Adjustment (PD-105 board) ····· 5-26
5. Contrast Adjustment (PD-105 board) ····· 5-26
6. V-COM Level Adjustment (PD-105 board) ····· 5-27
7. Color Adjustment (PD-105 board) ····· 5-27
8. V-COM Adjustment (PD-105 board) ····· 5-28
9. White Balance Adjustment (PD-105 board) ····· 5-28
5-2. MECHANISM SECTION ADJUSTMENT ····· 5-29
2-1. Operating Without Cassette ····· 5-29
2-2. Tape Path Adjustment ····· 5-29
5-3. VIDEO SECTION ADJUSTMENT ····· 5-30
3-1. Preparations Before Adjustments ····· 5-30
3-1-1. Equipment to Required ····· 5-30
3-1-2. Precautions on Adjusting ····· 5-31
3-1-3. Adjusting Connectors ····· 5-31
3-1-4. Connecting the Equipments ····· 5-32
3-1-5. Alignment Tape ····· 5-33
3-1-6. Input/Output Level and Impedance ····· 5-33
3-1-7. Recording Mode (Standard 8/Hi8) Switching ····· 5-33
3-2. System Control System Adjustment ····· 5-34
1. Initialization of D, E, F Page Data ····· 5-34
2. Battery End Adjustment (VC-214 board) ····· 5-34
3-3. Servo System Adjustments ····· 5-35
1. CAP FG Offset Adjustment (VC-214 board) ····· 5-35
2. Switching Position Adjustment (VC-214 board) ····· 5-35
3-4. Video System Adjustments ····· 5-36
1. 28 MHz Origin Oscillation Adjustment
(VC-214 board) ····· 5-36
2. AFC f_0 Adjustment (VC-214 board) ····· 5-36
3. Filter f_0 Adjustment (VC-214 board) ····· 5-37
4. Y OUT Level Adjustment (VC-214 board) ····· 5-37
5. C OUT Level Adjustment (VC-214 board) ····· 5-38
6. RP Filter f_0 Adjustment (VC-214 board) ····· 5-38
7. REC Y Current Adjustment (VC-214 board) ····· 5-39
8. REC L Level Adjustment (VC-214 board) ····· 5-40
9. REC C Current Adjustment (VC-214 board) ····· 5-41
3-5. IR Transmitter Adjustments ····· 5-42
IR Video Carrier Frequency Adjustment
(VC-214 board) ····· 5-42
IR Video Deviation Adjustment (VC-214 board) ····· 5-42
IR Audio Deviation Adjustment (VC-214 board) ····· 5-43
Audio System Adjustment ····· 5-44
1.5 MHz Deviation Adjustment (VC-214 board) ····· 5-45
1.7 MHz Deviation Adjustment (VC-214 board) ····· 5-45
BPF f0 Adjustment (VC-214 board) ····· 5-46
4-1. SERVICE MODE ····· 5-47
Adjustment Remote Commander ····· 5-47
1. Using the Adjustment Remote Commander ····· 5-47
2. Precautions Upon Using the Adjustment Remote
Commander ····· 5-47
4-2. Data Process ····· 5-48
5-3. Service Mode ····· 5-49
1. Test Mode Setting ····· 5-49
2. Emergency Memory Address ····· 5-50
3. EMG Code (Emergency Code) ····· 5-50
4. MSW Codes ····· 5-51
5. Bit Value Discrimination ····· 5-52
6. Input/Output Selection Check ····· 5-52
7. LED, LCD (Display Window) Check ····· 5-52
8. Record of Use Check ····· 5-53
9. Switch Check (1) ····· 5-53
Switch Check (2) ····· 5-54
Headphone Jack Check ····· 5-54

6. REPAIR PARTS LIST

6-1. Exploded Views ····· 6-1
6-1-1. Front Panel (D) Block and Battery Panel (P) Block
Assembly ····· 6-1

6-1-2. Cabinet (R) Block Assembly ····· 6-2
6-1-3. LCD Block Assembly ····· 6-3
6-1-4. Cabinet (L) Block and Main Boards Assembly ····· 6-4
6-1-5. EVF Block Assembly ····· 6-5
6-1-6. Cassette Compartment Assembly ····· 6-6
6-1-7. LS Chassis Assembly ····· 6-7
6-1-8. Mechanism Chassis Assembly ····· 6-8
6-2. Electrical Parts List ····· 6-9

* The color reproduction frame is shown on page 245.

SERVICE NOTE

1. POWER SUPPLY DURING REPAIRS

In this unit, about 10 seconds after power is supplied (8.4V) to the battery terminal using the service power cord (J-6082-223-A), the power is shut off so that the unit cannot operate.
This following two methods are available to prevent this. Take note of which to use during repairs.

Method 1.
Connect the servicing remote commander RM-95 (J-6082-053-B) to the LANC jack, and set the remote commander switch to the "ADJ" side.

Method 2.
Press the battery switch of the battery terminal using adhesive tape, etc.

Method 3.
Use the DC IN terminal. (Use the AC power adaptor.)

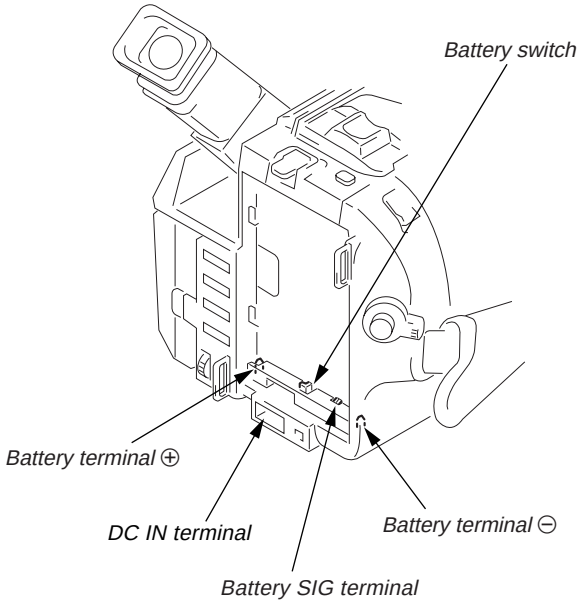

2. TO TAKE OUT A CASSETTE WHEN NOT EJECT (FORCE EJECT)

① Refer to 2-1. to remove the front panel assembly.
② Refer to 2-1. to remove the cabinet (R) assembly.
③ Refer to 2-1. to remove the battery panel assembly.
④ Refer to 2-1. to remove the cabinet (L) assembly.
⑤ Disconnect CN901 of VC-214 board.
⑥ Add +5V from the DC POWER SUPPLY and unload with a pressing the cassette lid.

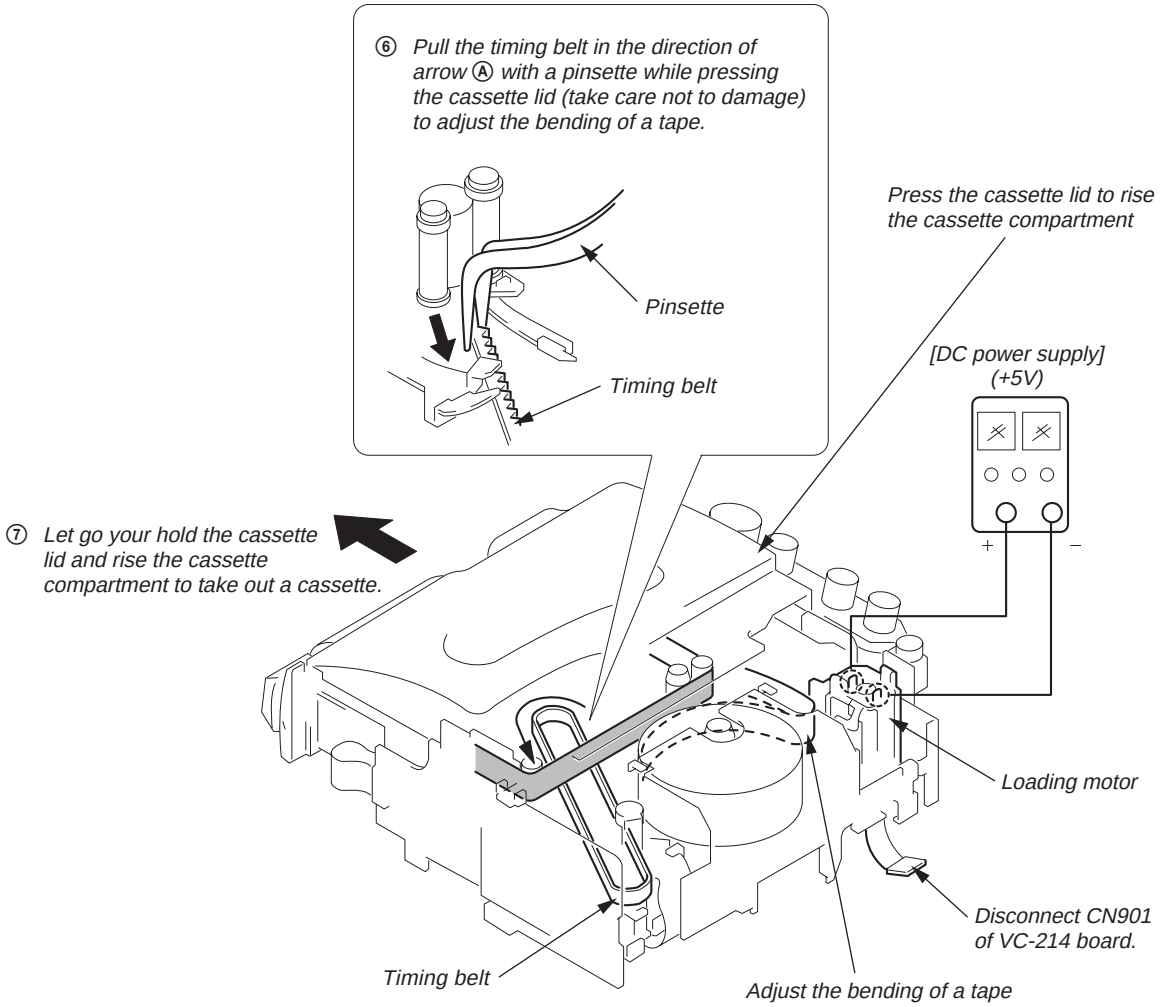
⑥ Pull the timing belt in the direction of arrow Ⓐ with a pinsette while pressing the cassette lid (take care not to damage) to adjust the bending of a tape.
Pinsette
Timing belt
Press the cassette lid to rise the cassette compartment
[DC power supply] (+5V)
+
–
⑦ Let go your hold the cassette lid and rise the cassette compartment to take out a cassette.
Loading motor
Disconnect CN901 of VC-214 board.
Timing belt
Adjust the bending of a tape

SELF-DIAGNOSIS FUNCTION

1. Self-diagnosis Function

When problems occur while the unit is operating, the self-diagnosis function starts working, and displays on the viewfinder or Display window what to do. This function consists of two display; self-diagnosis display and service mode display.
Details of the self-diagnosis functions are provided in the Instruction manual.

2. Self-diagnosis Display

When problems occur while the unit is operating, the counter of the viewfinder or Display window shows a 4-digit display consisting of an alphabet and numbers, which blinks at 3.2 Hz. This 5-character display indicates the "repaired by:", "block" in which the problem occurred, and "detailed code" of the problem.

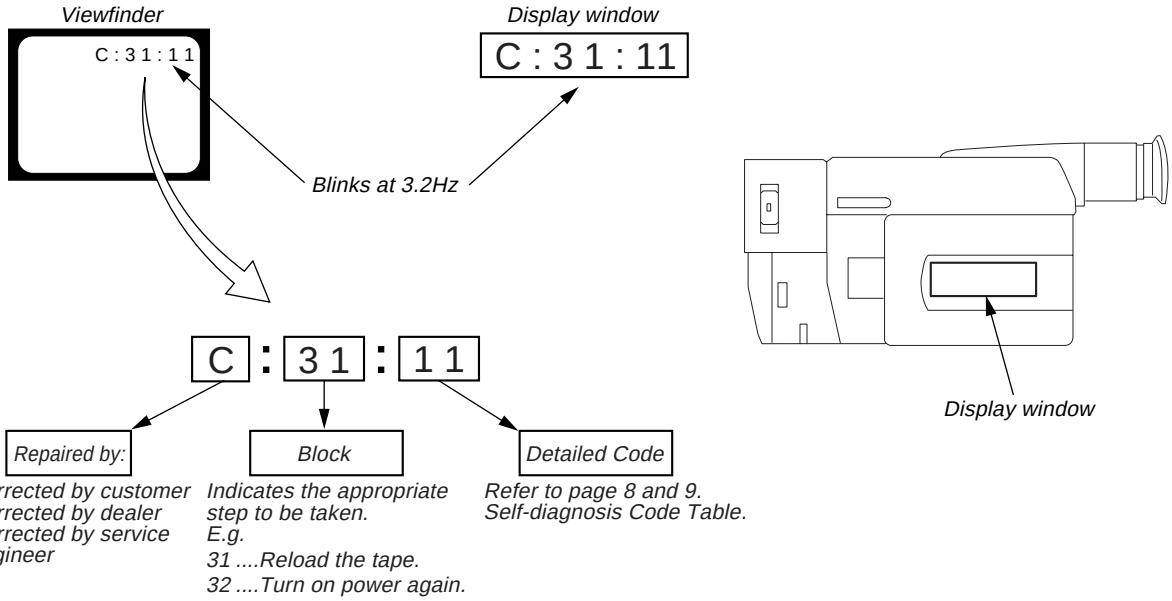

3. Service Mode Display

The service mode display shows up to six self-diagnosis codes shown in the past.

3-1. Display Method

While pressing the "STOP" key, set the switch from OFF to "VTR or PLAYER", and continue pressing the "STOP" key for 5 seconds continuously. The service mode will be displayed, and the counter will show the backup No. and the 5-character self-diagnosis codes.

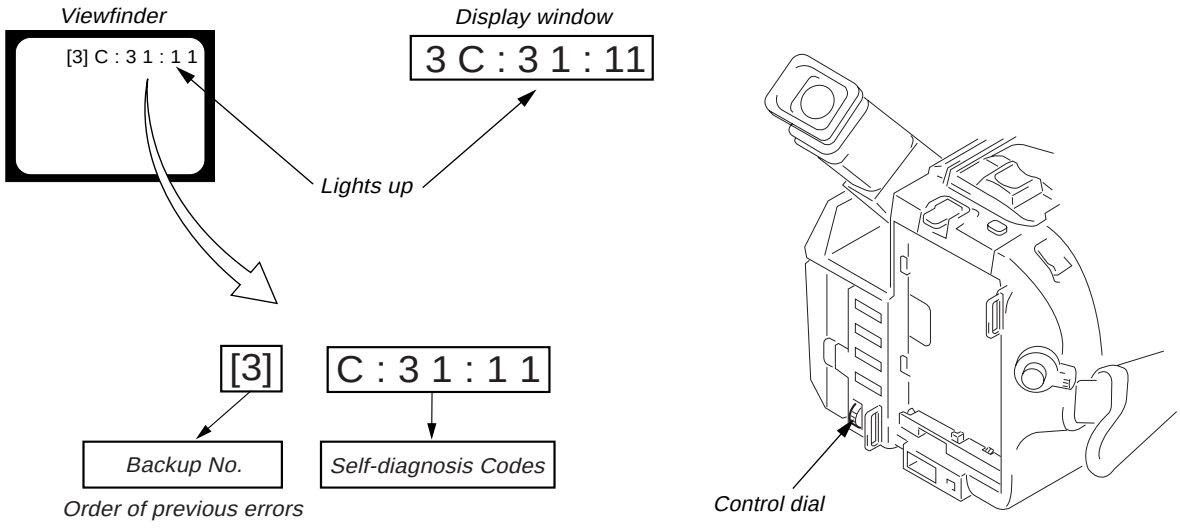

3-2. Switching of Backup No.

By rotating the control dial, past self-diagnosis codes will be shown in order. The backup No. in the [] indicates the order in which the problem occurred. (If the number of problems which occurred is less than 6, only the number of problems which occurred will be shown.)

[1] : Occurred first time [4] : Occurred fourth time
[2] : Occurred second time [5] : Occurred fifth time
[3] : Occurred third time [6] : Occurred the last time

3-3. End of Display

Turning OFF the power supply will end the service mode display.

Note: The "self-diagnosis display" data will be backed up by the coin-type lithium battery (CF-56 board BH001). When this coin-type lithium battery is disconnected, the "self-diagnosis display" data will be lost by initialization.

4. Self-diagnosis Code Table

Self-diagnosis Code				Symptom/State	Correction
Repaired by:	Block Function		Detailed Code		
C	2	1	0 0	Condensation.	Remove the cassette, and insert it again after one hour.
C	2	2	0 0	Video head is dirty.	Clean with the optional cleaning cassette.
C	2	3	0 0	Non-standard battery is used.	Use the InfoLITHIUM battery.
C	3	1	1 0	LOAD direction. Loading does not complete within specified time	Load the tape again, and perform operations from the beginning.
C	3	1	1 1	UNLOAD direction. Loading does not complete within specified time	Load the tape again, and perform operations from the beginning.
C	3	1	2 0	T reel side tape slacking when unloading.	Load the tape again, and perform operations from the beginning.
C	3	1	2 1	S reel side tape slacking when unloading.	Load the tape again, and perform operations from the beginning.
C	3	1	2 2	T reel fault.	Load the tape again, and perform operations from the beginning.
C	3	1	2 3	S reel fault.	Load the tape again, and perform operations from the beginning.
C	3	1	3 0	FG fault when starting capstan.	Load the tape again, and perform operations from the beginning.
C	3	1	3 1	FG fault during normal capstan operations.	Load the tape again, and perform operations from the beginning.
C	3	1	4 0	FG fault when starting drum.	Load the tape again, and perform operations from the beginning.
C	3	1	4 1	PG fault when starting drum.	Load the tape again, and perform operations from the beginning.
C	3	1	4 2	FG fault during normal drum operations.	Load the tape again, and perform operations from the beginning.
C	3	1	4 3	PG fault during normal drum operations.	Load the tape again, and perform operations from the beginning.
C	3	1	4 4	Phase fault during normal drum operations.	Load the tape again, and perform operations from the beginning.
C	3	2	1 0	LOAD direction loading motor time-out.	Remove the battery or power cable, connect, and perform operations from the beginning.
C	3	2	1 1	UNLOAD direction loading motor time-out.	Remove the battery or power cable, connect, and perform operations from the beginning.
C	3	2	2 0	T reel side tape slacking when unloading.	Remove the battery or power cable, connect, and perform operations from the beginning.
C	3	2	2 1	S reel side tape slacking when unloading.	Remove the battery or power cable, connect, and perform operations from the beginning.
C	3	2	2 2	T reel fault.	Remove the battery or power cable, connect, and perform operations from the beginning.
C	3	2	2 3	S reel fault.	Remove the battery or power cable, connect, and perform operations from the beginning.
C	3	2	3 0	FG fault when starting capstan.	Remove the battery or power cable, connect, and perform operations from the beginning.
C	3	2	3 1	FG fault during normal capstan operations.	Remove the battery or power cable, connect, and perform operations from the beginning.
C	3	2	4 0	FG fault when starting drum.	Remove the battery or power cable, connect, and perform operations from the beginning.
C	3	2	4 1	PG fault when starting drum.	Remove the battery or power cable, connect, and perform operations from the beginning.
C	3	2	4 2	FG fault during normal drum operations.	Remove the battery or power cable, connect, and perform operations from the beginning.
C	3	2	4 3	PG fault during normal drum operations.	Remove the battery or power cable, connect, and perform operations from the beginning.
C	3	2	4 4	Phase fault during normal drum operations.	Remove the battery or power cable, connect, and perform operations from the beginning.

Self-diagnosis Code			Symptom/State	Correction
Repaired by:	Block Function	Detailed Code		
E	6 1	0 0	Difficult to adjust focus (Cannot initialize focus.)	Inspect the lens block focus reset sensor (Pin ⑫ of CN551 of VC-214 board) when focusing is performed when the control dial is rotated in the focus manual mode and the focus motor drive circuit (IC552 of VC-214 board) when the focusing is not performed. **Note:** Use the remote commander RM-95 only for the model without the focus dial.
E	6 1	1 0	Zoom operations fault (Cannot initialize zoom lens.)	Inspect the lens block zoom reset sensor (Pin ⑭ of CN551 of VC-214 board) when zooming is performed when the zoom lens is operated and the zoom motor drive circuit (IC552 of VC-214 board) when zooming is not performed.
E	6 2	0 0	Handshake correction function does not work well. (With pitch angular velocity sensor output stopped.)	Inspect pitch angular velocity sensor (SE451 of SE-83 board) peripheral circuits.
E	6 2	0 1	Handshake correction function does not work well. (With yaw angular velocity sensor output stopped.)	Inspect yaw angular velocity sensor (SE452 of SE-83 board) peripheral circuits.

Quick Start Guide

This chapter introduces you to the basic features of your camcorder. See the page in parentheses "( )" for more information.

1 Connecting the power cord (p. 11)

Use the battery pack when using your camcorder outdoors (p. 8).

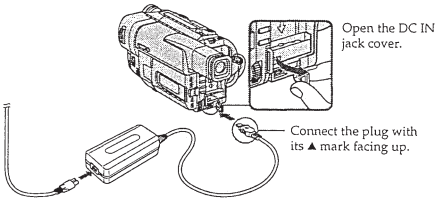

2 Inserting a cassette (p. 12)

❶ Slide EJECT in the direction of the arrow while pressing the small blue button.

❷ Insert a cassette into the cassette compartment with its window facing out.

❸ Close the cassette compartment by pressing the "PUSH" mark on the cassette compartment. The cassette compartment automatically goes down.

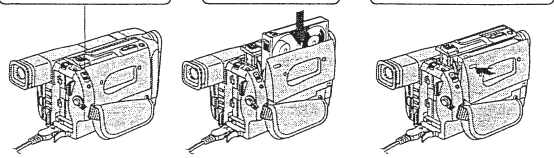

3 Recording a picture (p. 13)

❶ Set the POWER switch to CAMERA while pressing the small green button.

❷ Open the LCD panel while pressing OPEN.

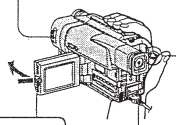

❸ Turn STANDBY to STANDBY. The picture appears on the LCD screen.

❹ Press the red button. Your camcorder starts recording. To stop recording, press the red button again.

Viewfinder
When the LCD panel is closed, use the viewfinder placing your eye against its eyecup.

4 Monitoring the playback picture on the LCD screen (p. 22)

❶ Set the POWER switch to VTR while pressing the small green button.

❷ Press ◄◄ to rewind the tape.

❸ Press ► to start playback.

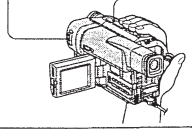

NOTE
Do not pick up your camcorder by holding the viewfinder or by holding the LCD panel.

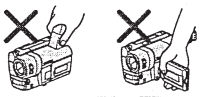

— Getting started —

Using this manual

As you read through this manual, buttons and settings on your camcorder are shown in capital letters.
e.g. Set the POWER switch to CAMERA.
When you carry out an operation, you can hear a beep sound to indicate that the operation is being carried out.

Note on TV color systems

TV color systems differ from country to country. To view your recordings on a TV, you need an NTSC system-based TV

Copyright precautions

Television programs, films, video tapes, and other materials may be copyrighted. Unauthorized recording of such materials may be contrary to the provision of the copyright laws.

Precautions on camcorder care

- **The LCD screen is manufactured using high-precision technology. However, there may be some tiny black spots and/or bright spots (red, blue or green in color) that constantly appear on the LCD screen. These spots occur normally in the manufacturing process and do not affect the recorded picture in any way. Effective number of pixels is 99.99% or more.**
- Do not let your camcorder get wet. Keep your camcorder away from rain and sea water. Letting your camcorder get wet may cause your camcorder to malfunction. Sometimes this malfunction cannot be repaired **[a]**.
- Never leave your camcorder exposed to temperatures above 140°F (60°C), such as in a car parked in the sun or under direct sunlight **[b]**.
- Do not place your camcorder so as to point the viewfinder or the LCD screen toward the sun. The inside of the viewfinder or the LCD screen may be damaged **[c]**.

[a]

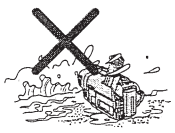

[b]

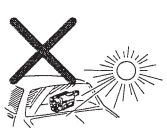

[c]

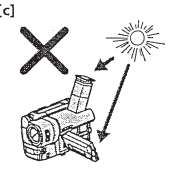

Checking supplied accessories

Make sure that the following accessories are supplied with your camcorder.

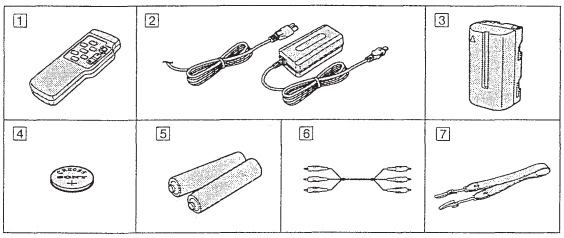

1 Wireless Remote Commander (1) (p. 79)

2 AC-L10A/L10B/L10C AC power adaptor (1), Power cord (1) (p. 9)

3 NP-F330 battery pack (1) (p. 8, 9)

4 CR2025 lithium battery (1) (p. 61)
The lithium battery is already installed in your camcorder.

5 Size AA (R6) battery for Remote Commander (2) (p. 79)

6 A/V connecting cable (1) (p. 25)

7 Shoulder strap (1) (p. 76)

Contents of the recording cannot be compensated if recording or playback is not made due to a malfunction of the camcorder, video tape, etc.

Step 1 Preparing the power supply

Installing the battery pack

Install the battery pack to use your camcorder outdoors.

Slide the battery pack down.

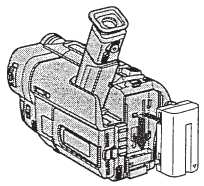

To remove the battery pack

Slide the battery pack out in the direction of the arrow while pressing ↓ BATT RELEASE down.

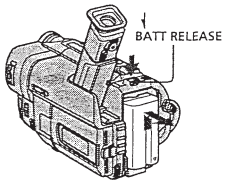

After installing the battery pack

Do not carry your camcorder by holding the battery pack. If you do so, the battery pack may slide off your camcorder unintentionally, damaging your camcorder.

Charging the battery pack

Use the battery pack after charging it for your camcorder.
Your camcorder operates only with the "InfoLITHIUM" battery pack (L series).

"InfoLITHIUM" is a trademark of Sony Corporation.

(1) Open the DC IN jack cover and connect the AC power adaptor supplied with your camcorder to the DC IN jack with the plug's ▲ mark facing up.
(2) Connect the power cord to the AC power adaptor.
(3) Connect the power cord to a wall outlet.
(4) Set the POWER switch to OFF. Charging begins. The remaining battery time is indicated in minutes on the display window.

When the remaining battery indicator changes to ▭, **normal charge** is completed. To fully charge the battery **(full charge)**, leave the battery pack attached for about 1 hour after normal charge is completed until FULL appears in the display window. Fully charging the battery allows you to use the battery longer than usual.

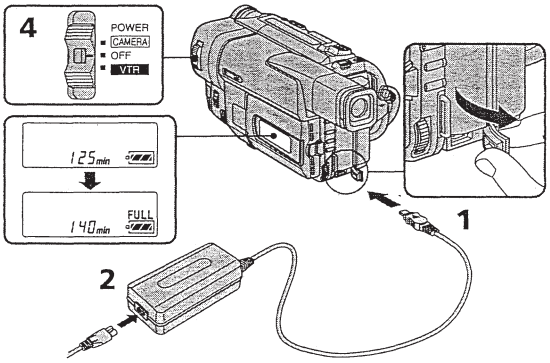

Note

Prevent metallic objects from coming into contact with the metal parts of the DC plug of the AC power adaptor. This may cause a short-circuit, damaging the AC power adaptor.

Remaining battery time indicator

The remaining battery time indicator in the display window roughly indicates the recording time with the viewfinder.

Battery pack

The battery pack is charged a little before it leaves the factory.

Until your camcorder calculates the actual remaining battery time

"– – – – min" appears in the display window.

Charging time

Battery pack	Full charge (Normal charge)
NP-F330 (supplied)	150 (90)
NP-F530/F550	210 (150)
NP-F730/F730H/F750	300 (240)
NP-F930/F950	390 (330)

Approximate number of minutes to charge an empty battery pack

Recording time

Battery pack	Recording with the viewfinder		Recording with the LCD screen	
	Continuous*	Typical**	Continuous*	Typical**
NP-F330 (supplied)	140 (125)	75 (65)	115 (100)	65 (55)
NP-F530	245 (220)	130 (120)	195 (170)	110 (95)
NP-F550	280 (250)	150 (135)	230 (200)	125 (110)
NP-F730	500 (450)	270 (245)	395 (355)	220 (195)
NP-F730H/F750	580 (525)	315 (285)	470 (425)	260 (235)
NP-F930	780 (705)	420 (380)	625 (560)	345 (310)
NP-F950	900 (790)	485 (425)	725 (650)	400 (360)

Approximate number of minutes when you use a fully charged battery

Numbers in parentheses "( )" indicate the time using a normally charged battery.
* Approximate continuous recording time at 77°F (25°C). The battery life will be shorter if you use your camcorder in a cold environment.
** Approximate number of minutes when recording while you repeat recording start/stop, zooming and turning the power on/off. The actual battery life may be shorter.

Playing time

Battery pack	Playing time on LCD screen	Playing time with LCD closed
NP-F330 (supplied)	110 (95)	135 (120)
NP-F530	185 (165)	235 (210)
NP-F550	220 (195)	270 (240)
NP-F730	380 (340)	475 (425)
NP-F730H/F750	455 (410)	550 (500)
NP-F930	600 (540)	745 (670)
NP-F950	700 (630)	850 (760)

Approximate number of minutes when you use a fully charged battery

Numbers in parentheses "( )" indicate the time using a normally charged battery. The battery life will be shorter if you use your camcorder in a cold environment.

After charging the battery pack

Disconnect the AC power adaptor from the DC IN jack on your camcorder.

Note on the remaining battery time indicator during recording

The indicator may not be correct, depending on the conditions in which you are recording. When you close the LCD panel and open it again, it takes about 1 minute for the correct remaining battery time to be displayed.

What is "InfoLITHIUM"?

The "InfoLITHIUM" is a lithium ion battery pack which can exchange data such as battery consumption with compatible video equipment. This unit is compatible with the "InfoLITHIUM" battery pack (L series). Your camcorder operates only with the "InfoLITHIUM" battery. "InfoLITHIUM" battery packs have the (i) *InfoLITHIUM* mark.
"InfoLITHIUM" is a trademark of Sony Corporation.

Connecting to a wall outlet

When you use your camcorder for a long time, we recommend that you power it from a wall outlet using the AC power adaptor.

(1) Open the DC IN jack cover, and connect the AC power adaptor to the DC IN jack on your camcorder with the plug's ▲ mark facing up.
(2) Connect the power cord to the AC power adaptor.
(3) Connect the power cord to a wall outlet.

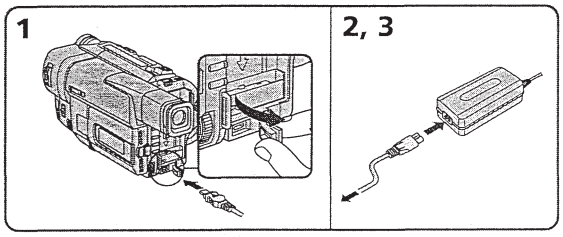

WARNING

The power cord must only be changed at a qualified service shop.

PRECAUTION

The set is not disconnected from the AC power source (house current) as long as it is connected to the wall outlet, even if the set itself has been turned off.

Notes

- The AC power adaptor can supply power even if the battery pack is attached to your camcorder.
- The DC IN jack has "source priority". This means that the battery pack cannot supply any power if the power cord is connected to the DC IN jack, even when the power cord is not plugged into a wall outlet.
- Keep the AC power adaptor away from the camcorder if the picture is disturbed.

Using a car battery

Use Sony DC Adaptor/Charger (not supplied).

Step 2 Inserting a cassette

When you want to record in the Hi8 system, use Hi8 video cassette **Hi8**.

(1) Slide EJECT in the direction of the arrow while pressing the small blue button. The cassette compartment automatically lifts up and opens.
(2) Insert a cassette with its window facing out and the tab on the cassette up.
(3) Close the cassette compartment by pressing the "PUSH" mark on the cassette compartment. The cassette compartment automatically goes down.

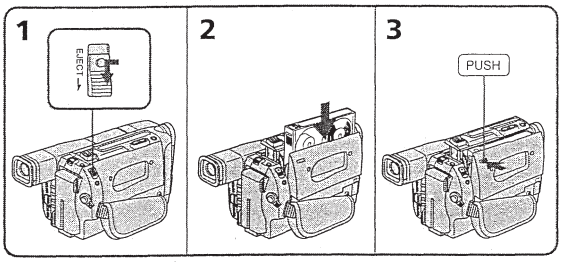

To eject a cassette
Slide EJECT in the direction of the arrow while pressing the small blue button.

Note
Do not press the cassette compartment down. Doing so may cause malfunction.

To prevent accidental erasure
Slide the write-protect tab on the cassette to expose the red mark.

Recording a picture

Your camcorder automatically focuses for you.

(1) Install the power source and insert a cassette. See "Step 1" and "Step 2" for more information (p. 8 to 12).
(2) Set the POWER switch to CAMERA while pressing the small green button. The lens cover opens.
(3) Open the LCD panel while pressing OPEN. The viewfinder automatically turns off.
(4) Turn STANDBY to STANDBY.
(5) Press START/STOP. Your camcorder starts recording The "REC" indicator appears. The camera recording lamp located on the front of your camcorder lights up. To stop recording, press START/STOP again.
The recording lamp lights up in the viewfinder when you record with the viewfinder.

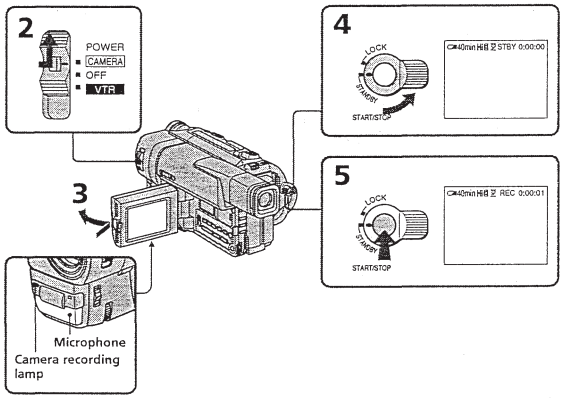

Note
Fasten the grip strap firmly. Do not touch the built-in microphone during recording.

To enable smooth transition
You can make the transition between the last scene you recorded and the next scene smooth as long as you do not eject the cassette. When you exchange the battery pack in the recording mode, set STANDBY to LOCK.

If you leave your camcorder in the standby mode for 5 minutes while the cassette is inserted
Your camcorder automatically turns off. This is to save battery power and to prevent battery and tape wear. To resume the standby mode, turn STANDBY down and up again. To start recording, press START/STOP.

To set the counter to 0:00:00
Press COUNTER RESET (p. 77).

Adjusting the LCD screen

To adjust the brightness of the LCD screen, press either of the two buttons on LCD BRIGHT.
The LCD panel moves about 90 degrees to the viewfinder side and about 210 degrees to the lens side.
If you turn the LCD panel over so that it faces the other way, the ☺ indicator appears in the viewfinder (**Mirror mode**).

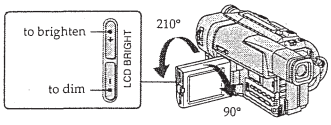

When closing the LCD panel, set it vertically until it clicks, and swing it into the camcorder body.

Note
When using the LCD screen except in the mirror mode, the viewfinder automatically turns off.

When you use the LCD screen outdoors in direct sunlight
The LCD screen may be difficult to see. If this happens, we recommend that you use the viewfinder.

Picture in the mirror mode
The picture on the LCD is a mirror-image. However, the picture will be normal when recorded.

During recording in the mirror mode
While recording in the mirror mode, you cannot operate the following buttons: MENU, TITLE, DATE, and TIME on your camcorder.

Indicators in the mirror mode
- The STBY indicator appears as ❚❚● and REC as ●. Some of the other indicators appear mirror-reversed and others are not displayed.
- The date appears mirror-reversed when the auto date function is working. However, the date will be normal when recorded.

After recording

(1) Turn STANDBY down to LOCK.
(2) Close the LCD panel.
(3) Eject the cassette.
(4) Set the POWER switch to OFF.

After use your camcorder
Remove the battery pack from your camcorder to avoid turning on the built-in light.

To record pictures with the viewfinder – adjusting the viewfinder

If you record pictures with the LCD panel closed, check the picture with the viewfinder. Adjust the viewfinder lens to your eyesight so that the indicators in the viewfinder come into sharp focus.

Lift up the viewfinder and move the viewfinder lens adjustment lever.

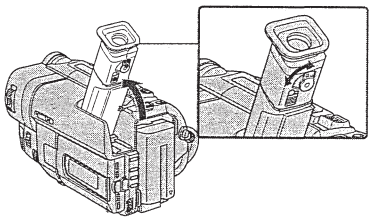

Using the zoom feature

Move the power zoom lever a little for a slower zoom. Move it further for a faster zoom.
Using the zoom function sparingly results in better-looking recordings.
"T" side: for telephoto (subject appears closer)
"W" side: for wide-angle (subject appears farther away)

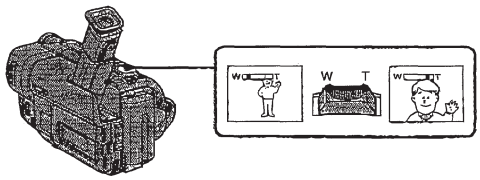

Zoom greater than 20× is performed digitally, if you set D ZOOM to ON in the MENU settings. The digital zoom function is set to OFF at the factory. (p. 51)

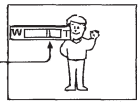

The right side of the bar shows the digital zooming zone.
The digital zooming zone appears when you set D ZOOM to ON.

When you shoot close to a subject
If you cannot get a sharp focus, move the power zoom lever to the "W" side until the focus is sharp. You can shoot a subject that is at least about 2 feet 5/8 inch (about 80 cm) away from the lens surface in the telephoto position, or about 1/2 inch (about 1 cm) away in the wide-angle position.

Notes on digital zoom
- Digital zoom starts to function when zoom exceeds 20×.
- The picture quality deteriorates as you go toward the "T" side. Set D ZOOM to OFF in the MENU settings. Otherwise the digital zoom activates without notice (p. 51).

START/STOP MODE setting

: Recording starts when you press START/STOP, and stops when you press it again (factory setting).
ANTI GROUND SHOOTING : The camcorder records only while you press START/STOP. Use this mode to avoid recording unnecessary scenes.
5SEC: When you press use this mode to START/STOP, your camcorder records for 5 seconds and then stops automatically.

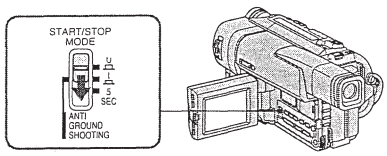

Notes
- You cannot use the fader function in the 5SEC or mode.
- The tape counter does not appear in the 5SEC mode.

To extend the recording time in the 5SEC mode
Five dots (●●●●●) appear, and then disappear at a rate of one per second. To extend the recording time, press START/STOP again before all the dots disappear. Recording continues for about 5 seconds from the moment you press START/STOP.

Indicators displayed in the recording mode

The indicators are not recorded on tape.

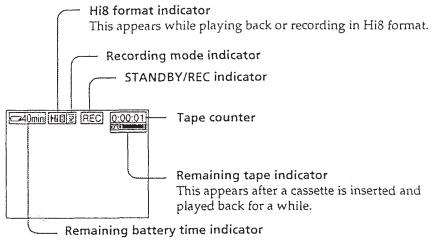
Hi8 format indicator
This appears while playing back or recording in Hi8 format.
Recording mode indicator
STANDBY/REC indicator
Tape counter
Remaining tape indicator
This appears after a cassette is inserted and played back for a while.
Remaining battery time indicator

Shooting backlit subjects (BACK LIGHT)

When you shoot a subject with the light source behind the subject or a subject with a light background, use the backlight function.

Press BACK LIGHT in the recording or standby mode.
The indicator appears in the viewfinder or on the LCD screen.
To cancel, press BACK LIGHT again.

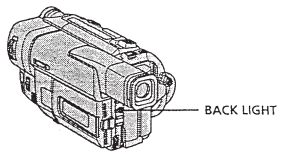

If you press EXPOSURE when shooting backlit subjects
The backlight function will be canceled.

Shooting in the dark (NightShot)

The NightShot function enables you to shoot a subject in a dark place. For example, you can satisfactorily record the environment of nocturnal animals for observation when you use this function.

(1) While your camcorder is in the standby mode, slide NIGHTSHOT to ON.
(2) Press START/STOP to start recording.
and "NIGHTSHOT" indicators flash on the LCD screen or in the viewfinder. To cancel the NightShot function, slide NIGHTSHOT to OFF.

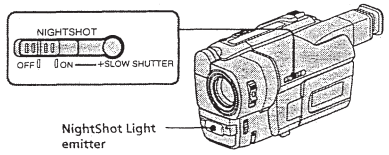

Using +SLOW SHUTTER

The NightShot +Slow shutter mode makes subjects more than four times brighter than those recorded in the NightShot mode.

(1) Slide NIGHTSHOT to ON in the standby mode. indicator appears.
(2) Press +SLOW SHUTTER until the desired NIGHTSHOT indicator flashes.
The indicator changes as follows:
(NightShot) → 1 (NightShot +Slow shutter1) →
2 (NightShot +Slow shutter2) → (NightShot)
To cancel the NightShot +Slow shutter mode, slide NIGHTSHOT to OFF.

Using the NightShot Light

The picture will be clearer with the NightShot Light on. To enable NightShot Light, set N.S.LIGHT to ON in the MENU settings (p. 51).

Notes
- Do not use the NightShot function in bright places (ex. outdoors in the daytime). This may cause your camcorder to malfunction.
- When you keep setting NIGHTSHOT to ON in normal recording, the picture may be recorded in incorrect or unnatural colors.
- If focusing is difficult with the autofocus mode when using the NightShot function, focus manually.

While using the NightShot function, you can not use the following functions:
– Exposure
– PROGRAM AE
– Fader*
– Digital effect*
* You cannot use these functions only in the NightShot +Slow shutter mode.

Shutter speed in the NightShot +Slow shutter mode

Shutter speed number	Shutter speed
+SLOW SHUTTER1	1/15
+SLOW SHUTTER2	1/4

The +SLOW SHUTTER button does not work:
– while the fader function is set or in use
– while the digital effect function is in use
– when NIGHTSHOT is set to OFF

NightShot Light
NightShot Light rays are infrared and so are invisible. The maximum shooting distance using the NightShot Light is about 10 feet (3 m). The shooting distance will be twice or more in the NightShot +Slow shutter mode.

Recording a picture

Superimposing the date and time on pictures

You can record the date or time displayed in the viewfinder or on the LCD screen superimposed on the picture.
Carry out the following operations in the standby or recording mode.

Press DATE to record the date.
Press TIME to record the time.
Press DATE (or TIME), then press TIME (or DATE) to record the date and time.

Press DATE and/or TIME again. The date and/or time indicator disappears.

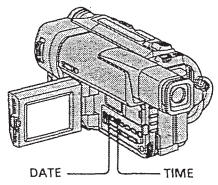

The clock is set to East Coast Standard Time at the factory. You can reset the clock in the MENU settings (p. 51).

Note
The date and time indicators recorded manually cannot be deleted.

If you do not record the date and time in the picture
Record the date and time in the black screen as the background for about 10 seconds, then erase the date and time indicators before starting actual recording.

Checking the recording
– END SEARCH / EDITSEARCH / Rec Review

You can use these buttons to check the recorded picture or shoot so that the transition between the last recorded scene and the next scene you record is smooth.

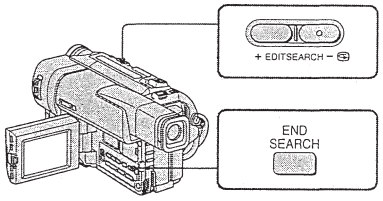

END SEARCH

You can go to the end of the recorded section after you record.

Press END SEARCH in the standby mode.
The last 5 seconds of the recorded section are played back and playback stops. You can monitor the sound from the speaker or headphones.

Note
If you start recording after using the end search function, occasionally, the transition between the last scene you recorded and the next scene may not be smooth.

Once you eject the cassette after you have recorded on the tape
The end search function does not work.

EDITSEARCH

You can search for the next recording start point.

Hold down the +/– (⊖) side of EDITSEARCH in the standby mode. The recorded section is played back.
+ : to go forward
– : to go back
Release EDITSEARCH to stop playback. If you press START/STOP, re-recording begins from the point you released EDITSEARCH. You cannot monitor the sound

Rec Review

You can check the last recorded section.

Press the – (⊖) side of EDITSEARCH momentarily in the standby mode.
The last few seconds of the recorded section are played back. You can monitor the sound from the speaker or headphones.

Playing back a tape

You can monitor the playback picture on the LCD screen or in the viewfinder. You can control playback using the Remote Commander supplied with your camcorder.
(1) Install the power source and insert the recorded tape.
(2) Set the POWER switch to VTR while pressing the small green button. The video control buttons light up.
(3) Open the LCD panel while pressing OPEN.
(4) Press ◄◄ to rewind the tape.
(5) Press ► to start playback.
(6) To adjust the volume, press either of the two buttons on VOLUME. The speaker on your camcorder is silent when the LCD panel is closed.

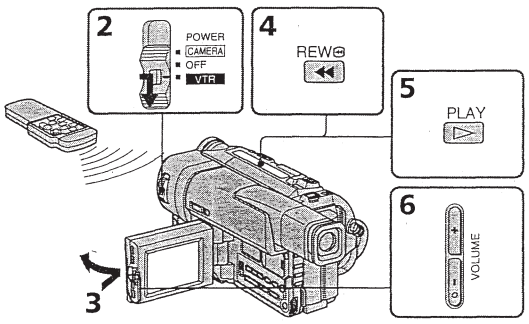

To stop playback
Press ■.

When monitoring on the LCD screen
You can turn the LCD panel over and move it back to the camcorder body with the LCD screen facing out **[a]**. You can adjust the angle of the LCD panel by lifting the LCD panel up by 15 degrees **[b]**.

[a]

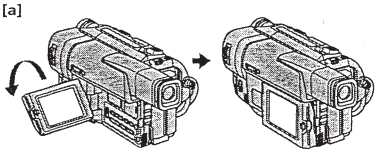

[b]

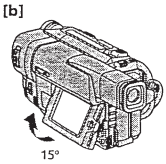

Playing back a tape

To display the screen indicators – Display function

Press DISPLAY on your camcorder or the Remote Commander supplied with your camcorder.
The indicators appear on the LCD screen.
To make the indicators disappear, press DISPLAY again.

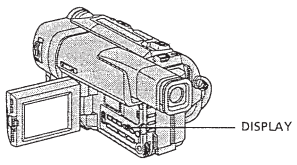

Various playback modes

To operate control buttons, set the POWER switch to VTR.

To view a still picture (playback pause)
Press II during playback. To resume playback, press II or ►.

To advance the tape
Press ►► in the stop mode. To resume normal playback, press ►.

To rewind the tape
Press ◄◄ in the stop mode. To resume normal playback, press ►.

To locate a scene monitoring the picture (picture search)
Keep pressing ◄◄ or ►► during playback. To resume normal playback, release the button.

To monitor the high-speed picture while advancing or rewinding the tape (skip scan)
Keep pressing ◄◄ while rewinding or ►► while advancing the tape. To resume rewinding or advancing, release the button.

To view the picture at 1/5 speed (slow playback)
Press I► on the Remote Commander during playback. To resume normal playback, press ►.

To search the last scene recorded (END SEARCH)
Press END SEARCH in the stop mode. The last 5 seconds of the recorded section plays back and stops.

In the various playback modes
Sound is muted.

When the playback pause mode lasts for 5 minutes
Your camcorder automatically enters the stop mode. To resume playback, press ►.

If slow playback lasts for about 1 minute
Your camcorder automatically returns to normal speed.

When you play back a tape recorded in the LP mode
Noise may appear during playback pause mode, slow playback or picture search.

Viewing the recording on TV

Connect your camcorder to your TV or VCR with the A/V connecting cable supplied with your camcorder to watch the playback picture on the TV screen. You can operate the playback control buttons in the same way as when you monitor playback pictures on the LCD screen. When monitoring the playback picture on the TV screen, we recommend that you power your camcorder from a wall outlet using the AC power adaptor (p. 11). Refer to the operating instructions of your TV or VCR.

Open the jack cover. Connect your camcorder to the TV using the A/V connecting cable. Then, set the TV/VCR selector on the TV to VCR.

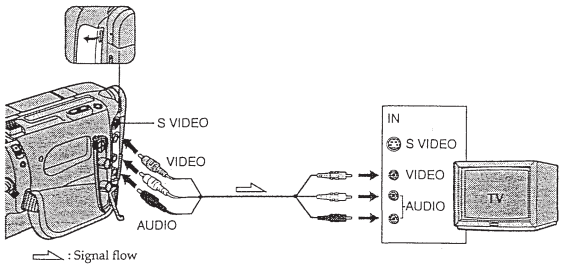

If your TV is already connected to a VCR

Connect your camcorder to the LINE IN input on the VCR by using the A/V connecting cable supplied with your camcorder. Set the input selector on the VCR to LINE.

If your TV or VCR is a monaural type

Connect the yellow plug for video and the white plug for audio on both your camcorder and the TV or the VCR (you do not need to connect the red plug). With this connection, the sound is monaural even on stereo models.

To connect to a TV or VCR without Video/Audio input jacks

Use an NTSC system RFU adaptor (not supplied).
Refer to the operating instructions of your TV or VCR and the RFU adaptor. With an RFU adaptor, the sound is monaural.

If your TV or VCR has an S video jack
Connect using an S video cable (not supplied) to obtain high-quality pictures. With this connection, you do not need to connect the yellow (video) plug of the A/V connecting cable.
Connect the S video cable (not supplied) to the S video jacks on both your camcorder and the TV or the VCR.

Using the AV cordless IR receiver

Once you connect the AV cordless IR receiver (not supplied) to your TV or VCR, you can easily view the picture on your TV. For details, refer to the operating instructions of the AV cordless IR receiver.

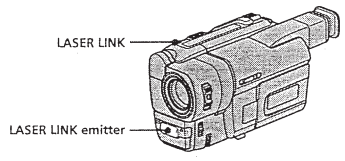

(1) After connecting your TV and AV cordless IR receiver, set the POWER switch on the AV cordless IR receiver to ON.
(2) Turn the TV on and set the TV/VCR selector on the TV to VCR.
(3) Press LASER LINK. The lamp of LASER LINK lights up.
(4) Press ► on your camcorder to start playback.
(5) Point the LASER LINK emitter at the AV cordless IR receiver. Adjust the position of your camcorder and the AV cordless IR receiver to obtain clear playback pictures.

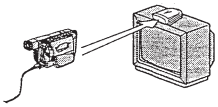

To cancel the laser link function
Press LASER LINK. The lamp on the LASER LINK button goes out.

If you turn the power off
Laser link turns off automatically.

If you use a Sony TV
- You can turn on the TV automatically when you press LASER LINK or ►. To do so, set AUTO TV ON to ON in the MENU settings and turn the TV's main switch on, then do either of the following:
  – Point the LASER LINK emitter at the TV's remote sensor and press LASER LINK.
  – Turn on laser link and press ►.
- You can switch the video input of the TV automatically to the one which the AV cordless IR receiver is connected. To do so, set AUTO TV ON to ON and TV INPUT to the same video input (1, 2, 3) in the MENU settings. With some models, however, the picture and sound may be disconnected momentarily when the video input is switched.
- The above feature may not work on some TV models.

Note
When laser link is activated (the LASER LINK button is lit), your camcorder consumes power. Press LASER LINK to turn off the laser link function when it is not needed.

Photo recording

You can record a still picture like a photograph. This mode is useful when you want to record a picture such as a photograph or when you print a picture using a video printer (not supplied).

NORMAL PHOTO This mode records a still picture for about seven seconds.

FADE PHOTO

SHUTTER PHOTO

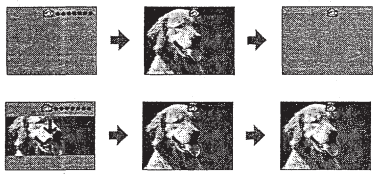

(1) While your camcorder is in the standby mode, select the photo mode in the MENU settings (p. 51).
(2) Keep pressing PHOTO lightly until a still picture appears. CAPTURE appears. Recording does not start yet.
To change the still picture, release PHOTO, select a still picture again, and then press and hold PHOTO lightly.
(3) Press PHOTO deeper.
The still picture in the viewfinder or on the LCD screen is recorded for about seven seconds. The sound during those seven seconds is also recorded.
During recording, the image you are shooting appears in the viewfinder or on the LCD screen.

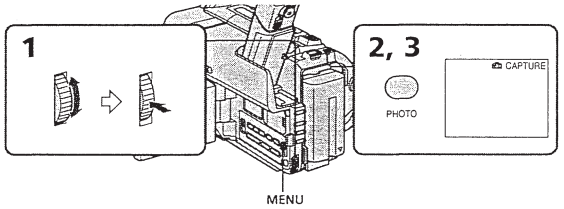

Photo recording

Notes

- During photo recording, you cannot change the mode or setting of the following functions:
  - Digital effect
  - Fader
  - PROGRAM AE
  - Picture effect
  - Exposure
  - Wide mode
  - Backlight
  - NightShot +Slow shutter
- The PHOTO button does not work:
  - while the digital effect function is set or in use.
  - while the fader function is in use.
- When recording a still picture, do not shake your camcorder. The picture may fluctuate.

To record a still picture during normal recording

Press PHOTO deeper. The still picture is then recorded for about seven seconds and your camcorder returns to the standby mode. You cannot select another still picture.

Using the wide mode

You can record a cinema-like picture (CINEMA) or a 16:9 wide picture to watch on the 16:9 wide-screen TV (16:9 FULL). Refer to the operating instructions of your TV.

CINEMA

Black bands appear on the screen during recording in the CINEMA mode [a], playing back on a normal TV [b] or a wide-screen TV [c]. If you set the screen mode of the wide screen TV to the zoom mode, a picture without black bands appears [d].

16:9 FULL

The picture during recording in the 16:9 FULL mode [e], or playing back on a normal TV [f] or a wide-screen TV [g] is horizontally compressed. If you set the screen mode of the wide-screen TV to the full mode, you can watch pictures of normal images [h]

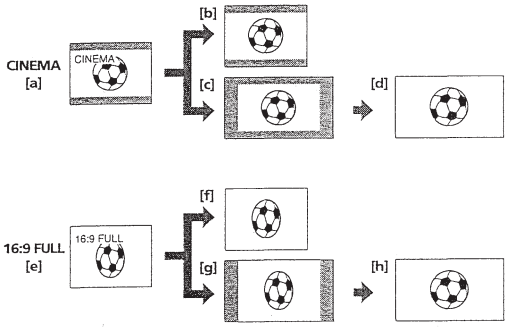

Using the wide mode

In the standby mode, set 16:9WIDE to CINEMA or 16:9FULL in the MENU settings (p. 51).

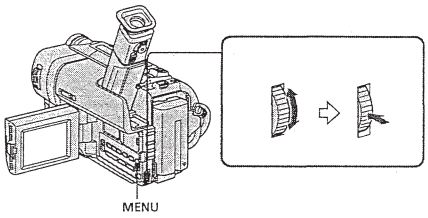

To cancel the wide mode

Set 16:9WIDE to OFF in the MENU settings.

If the wide mode is set to 16:9FULL

The SteadyShot function does not work. If you select 16:9FULL in the MENU settings when the SteadyShot function is working, "☞" flashes and the SteadyShot function does not function.

In the wide mode

You cannot select the old movie function with DIGITAL EFFECT and the bounce function with FADER.

Date or time indicator

When you record in the 16:9FULL mode, the date or time indicator will be widened on wide-screen TVs.

During recording

You cannot change or cancel the wide mode.

Using the fader function

You can fade in or out to give your recording a professional appearance.

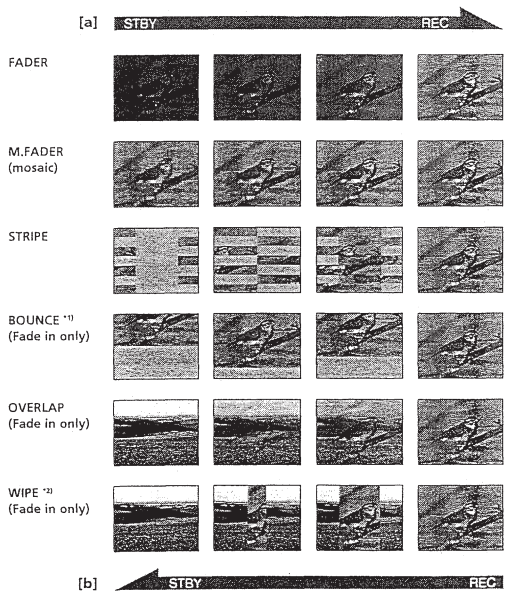

MONOTONE

When fading in, the picture gradually changes from black-and-white to color.
When fading out the picture gradually changes from color to black-and-white.

*1) You cannot use this function when D ZOOM is set to ON in the MENU settings.
*2) The sound does not wipe away.

Using the fader function

(1) When fading in [a]
In the standby mode, press FADER until the desired fader indicator flashes.
When fading out [b]
In the recording mode, press FADER until the desired fader indicator flashes.
The indicator changes as follows:
FADER → M.FADER → STRIPE → BOUNCE → MONOTONE → OVERLAP → WIPE → no indicator
The last selected fader mode is indicated first of all.
(2) Press START/STOP. The fader indicator stops flashing.

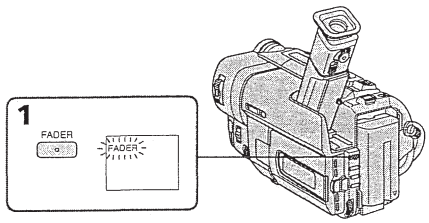

To cancel the fader function

After the fade in/out is carried out : Your camcorder automatically returns to the normal mode.
Before the fade in/out is carried out : Before pressing START/STOP, press FADER until the indicator disappears.

Using the Fader function

Note

You cannot use the following functions while using the fader function. Also, you cannot use the fader function while using the following functions.
– Digital effect
– Low lux mode of PROGRAM AE (Overlap/Wipe function only)
– NightShot +Slow shutter

The date, time indicator and title do not fade in or fade out
Erase them before operating the fader function if they are not needed.

If you do not record anything before operating the wipe or overlap function
Your camcorder stores the image on the tape. As the image is being stored, the WIPE or OVERLAP indicator flashes quickly, and the picture you are shooting disappears from the viewfinder. Depending on the tape condition, the picture may not be recorded clearly.

When START/STOP MODE is set to ⊥ or 5SEC
You cannot use the fader function.

While using the bounce function, you cannot use the following functions:
– Exposure
– Focus
– Zoom

Note on the bounce function
The BOUNCE indicator does not appear in the following mode or functions:
– D ZOOM is set to ON in the MENU settings
– Wide mode
– Picture effect
– PROGRAM AE

Using special effects – Picture effect

You can digitally process images to obtain special effects like those in films or on the TV.

PASTEL [a] : The contrast of the picture is emphasized, and the picture looks like an animated cartoon.
NEG. ART [b] : The color and brightness of the picture is reversed.
SEPIA : The picture is sepia.
B&W : The picture is monochrome (black-and-white).
SOLARIZE [c] : The light intensity is clearer, and the picture looks like an illustration.
MOSAIC [d] : The picture is mosaic.
SLIM [e] : The picture expands vertically.
STRETCH [f] : The picture expands horizontally.

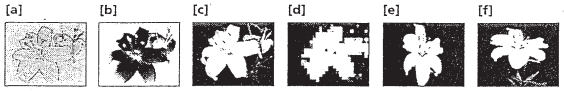

(1) Press PICTURE EFFECT in the standby or recording mode.
The picture effect indicator appears.
(2) Turn the SEL/PUSH EXEC dial to select the desired picture effect mode.
The indicator changes as follows:
PASTEL ⟷ NEG.ART ⟷ SEPIA ⟷ B&W ⟷ SOLARIZE ⟷ MOSAIC ⟷ SLIM ⟷ STRETCH

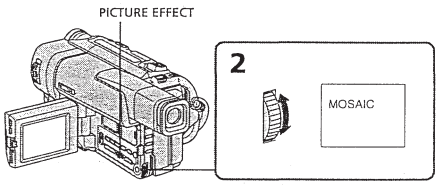

To turn the picture effect function off

Press PICTURE EFFECT.

While using the picture effect function
You cannot select the old movie mode with DIGITAL EFFECT.

When you turn the power off
Your camcorder automatically returns to the normal mode.

Using special effects – Digital effect

You can add special effects to recorded pictures using the various digital functions. The sound is recorded normally.

STILL
You can record a still picture so that it is superimposed on a moving picture.

FLASH (FLASH MOTION)
You can record still pictures successively at constant intervals.

LUMI. (LUMINANCEKEY)
You can swap a brighter area in a still picture with a moving picture.

TRAIL
You can record the picture so that an incidental image like a trail is left.

SLOW SHTR (SLOW SHUTTER)
You can slow down the shutter speed. The slow shutter mode is good for recording dark pictures more brightly. However, the picture may be less clear.

OLD MOVIE
You can add an old movie type atmosphere to pictures. Your camcorder automatically sets the wide mode to CINEMA, picture effect to SEPIA, and the appropriate shutter speed.

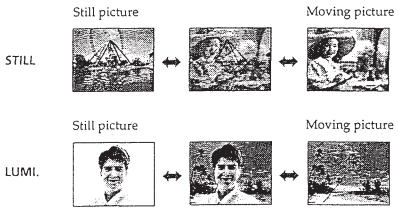

Using special effects – Digital effect

(1) While your camcorder is in the standby or recording mode, press DIGITAL EFFECT. The digital effect indicator appears.
(2) Turn the SEL/PUSH EXEC dial to select the desired digital effect mode. The indicator changes as follows:
STILL ⟷ FLASH ⟷ LUMI. ⟷ TRAIL ⟷ SLOW SHTR ⟷ OLD MOVIE
(3) Press the SEL/PUSH EXEC dial. The indicator lights up and the bars appear. In the STILL and LUMI. modes, the still picture is stored in memory.
(4) Turn the SEL/PUSH EXEC dial to adjust the effect.

Items to adjust

STILL	The rate of the still picture you want to superimpose on the moving picture
FLASH	The interval of flash motion
LUMI.	The color scheme of the area in the still picture which is to be swapped with a moving picture
TRAIL	The vanishing time of the incidental image
SLOW SHTR	Shutter speed. The larger the shutter speed number, the slower the shutter speed.
OLD MOVIE	No adjustment necessary

The more bars there are on screen, the stronger the digital effect. The bars appear in the following modes: STILL, FLASH, LUMI. and TRAIL.

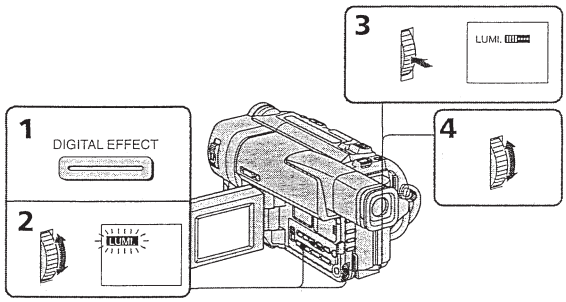

To cancel the digital effect
Press DIGITAL EFFECT. The digital effect indicator disappears.

Using special effects – Digital Effect

Notes
- The following functions do not work during digital effect:
  - Fader
  - Low lux mode of PROGRAM AE
  - Photo recording
  - NightShot +Slow shutter
- The following function does not work in the slow shutter mode:
  - Exposure
- The following functions do not work in the old movie mode.
  - Exposure
  - Wide mode
  - Picture effect

When you turn the power off
The digital effect will be automatically canceled.

When recording in the slow shutter mode
Auto focus may not be effective. Focus manually using a tripod.

Shutter speed

Shutter speed number	Shutter speed
SLOW SHTR 1	1/30
SLOW SHTR 2	1/15
SLOW SHTR 3	1/8
SLOW SHTR 4	1/4

Using the PROGRAM AE function

You can select PROGRAM AE (Auto Exposure) mode to suit your specific shooting requirements.

● **Spotlight mode**
This mode prevents people's faces, for example, from appearing excessively white when shooting subjects lit by strong light at weddings or in the theater.

Soft portrait mode
This mode brings out the subject while creating a soft background for subjects such as people or flowers, and faithfully reproduces skin color.

Sports lesson mode
This mode minimizes shake on fast-moving subjects such as in tennis or golf.

Beach & ski mode
This mode prevents peoples' faces from appearing dark in strong light or reflected light, such as at a beach in midsummer or on a ski slope.

Sunset & moon mode
This mode allows you to maintain atmosphere when you are recording sunsets, general night views, fireworks displays and neon signs.

Landscape mode
This mode is for when you are recording distant subjects such as mountains and prevents your camcorder from focusing on glass or metal mesh in windows when you are recording a subject behind glass or a screen.

Low lux mode
This mode makes subjects brighter in insufficient light.

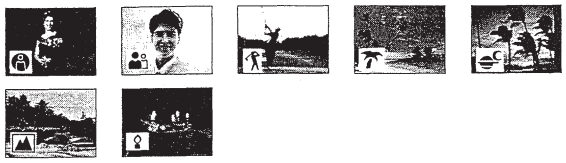

Using the PROGRAM AE function

(1) Press PROGRAM AE in the standby mode. The PROGRAM AE indicator appears.
(2) Turn the SEL/PUSH EXEC dial to select the desired PROGRAM AE mode. The indicator changes as follows:
● ⟷ ⟷ ⟷ ⟷ ⟷ ⟷ ⟷ ⟷ ●

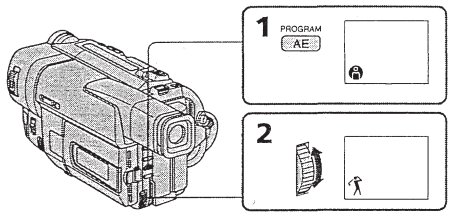

To turn the PROGRAM AE function off
Press PROGRAM AE.

Notes
- In the spotlight, sports lesson and beach & ski modes, you cannot take close-ups. This is because your camcorder is set to focus only on subjects in the middle to far distance.
- In the sunset & moon and landscape modes, your camcorder is set to focus only on distant subjects.
- The following functions do not work in the PROGRAM AE mode:
  - Slow shutter
  - Old movie
  - NightShot
  - Bounce
- The following functions do not work in the low lux mode:
  - Digital effect
  - Overlap
  - Wipe
  - Exposure
- If you press PROGRAM AE when using the NightShot function, the PROGRAM AE indicator flashes and the PROGRAM AE function does not work.

If you are recording under a discharge tube such as a fluorescent lamp, sodium lamp or mercury lamp
Flickering or changes in color may occur in the following modes. If this happens, turn the PROGRAM AE function off.
- Soft portrait mode
- Sports lesson mode

Adjusting the exposure manually

You can manually adjust and set the exposure. When you turn your camcorder on, it will automatically be in the automatic exposure mode. This mode works to record subjects so that they are recorded slightly brighter than they actually are.
Adjust the exposure manually in the following cases:
- The subject is backlit
- Bright subject and dark background
- To record dark pictures (e.g. night scenes) faithfully

(1) Press EXPOSURE in the standby or recording mode.
The exposure indicator appears.
(2) Turn the SEL/PUSH EXEC dial to adjust the brightness.

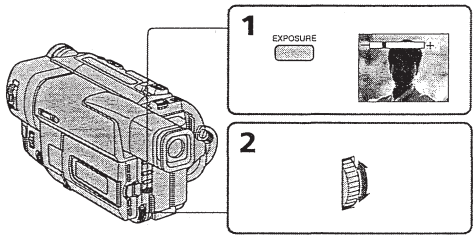

To return to the automatic exposure mode
Press EXPOSURE again.

Note
When you adjust the exposure manually, the following function and modes do not work:
- Backlight
- Slow shutter
- Old movie

If you change the PROGRAM AE mode or slide NIGHTSHOT to ON
Your camcorder automatically returns to the automatic exposure mode.

Focusing manually

You can gain better results by manually adjusting the focus in the following cases:
- The autofocus mode is not effective when shooting
  - subjects through glass coated with water droplets
  - horizontal stripes
  - subjects with little contrast with backgrounds such as walls and sky
- When you want to change the focus from a subject in the foreground to a subject in the background
- Shooting a stationary subject when using a tripod

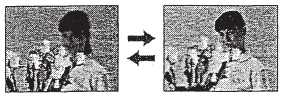

(1) Set FOCUS to MANUAL in the standby or recording mode. The ☞ indicator appears.
(2) Turn NEAR/FAR to sharpen focus.

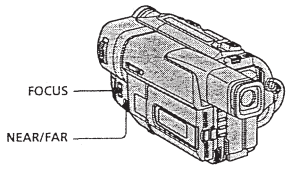

To return to the autofocus mode
Set FOCUS to AUTO.

To record distant subjects
When you press FOCUS down to INFINITY, the lens focuses on infinity. When you release FOCUS, your camcorder returns to the manual focus mode. Use this mode when your camcorder focuses on near objects even though you are trying to shoot a distant object.

Shooting in relatively dark places or shooting fast-moving subjects in relatively bright places
Shoot at the "W" (wide-angle) position after focusing at the "T" (telephoto) position.

When you shoot close to the subject
Focus at the end of the "W" (wide-angle) position.

The following indicators may appear
▲ when recording a distant subject.
● when the subject is too close to focus on.

Superimposing a title

You can select one of eight preset titles and two custom titles (p. 44). You can also select the language, color, size and position of titles.

(1) Press TITLE in the standby mode.
(2) Turn the SEL/PUSH EXEC dial to select 🗀, then press the dial.
(3) Turn the SEL/PUSH EXEC dial to select the desired title, then press the dial.
The titles are displayed in the language you selected.
(4) Change the color, size, or position, if necessary.
① Turn the SEL/PUSH EXEC dial to select the color, size, or position, then press the dial. The item appears.
② Turn the SEL/PUSH EXEC dial to select the desired item, then press the dial.
③ Repeat steps ① and ② until the title is laid out as desired.
(5) Press the SEL/PUSH EXEC dial again to complete the setting.
(6) Press START/STOP to start recording.
(7) When you want to stop recording the title, press TITLE.

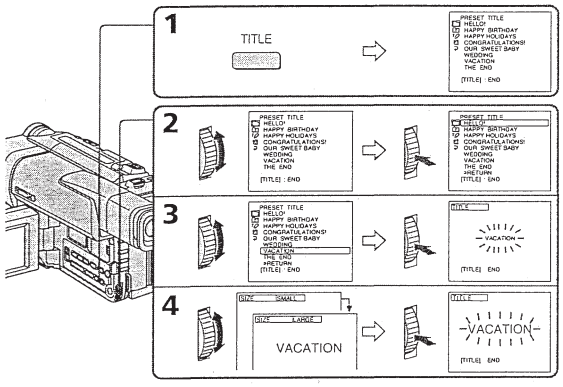

To superimpose the title while you are recording
Press TITLE while you are recording, and carry out steps 2 to 5. When you press the SEL/PUSH EXEC dial at step 5, the title is superimposed.

To select the language of a preset title
If you want to change the language, select 🗀 before step 2. Then select the desired language and return to step 2.

Superimposing a title

Note
Both the date and time or either of them may not be displayed depending on the size or position of the title.

If you display the menu or title menu while superimposing a title
The title is not recorded while the menu or title menu is displayed.

To use the custom title
If you want to use the custom title, select 🗀 in step 2.
If you have not made any custom title, "– – – – ..." appears on the display.

When the title is displayed
The LCD BRIGHT and VOLUME indicators do not appear. However, you can adjust the LCD BRIGHT and VOLUME.

Title setting
- The title color changes as follows :
  WHITE ⟷ YELLOW ⟷ VIOLET ⟷ RED ⟷ CYAN ⟷ GREEN ⟷ BLUE
- The title size changes as follows :
  SMALL ⟷ LARGE
  If you input 13 characters or more for a LARGE title, the title is automatically reduced in size after its position is set.
- The title position changes as follows :
  1⟷ 2⟷ 3⟷ 4⟷ 5⟷ 6⟷ 7⟷ 8⟷ 9
  The larger the position number, the lower the title is positioned.
  When you select the title size "LARGE", you cannot choose position 9.

When you are selecting and setting the title
You cannot superimpose the title displayed on the screen.

When you superimpose a title while you are recording
The beep does not sound.

Making your own titles

You can make up to two titles and store them in your camcorder. Each title can have up to 20 characters.

(1) Press TITLE in the standby or VTR mode.
(2) Turn the SEL/PUSH EXEC dial to select , then press the dial.
(3) Turn the SEL/PUSH EXEC dial to select the first line (CUSTOM1) or second line (CUSTOM2), then press the dial.
(4) Turn the SEL/PUSH EXEC dial to select the column of the desired character, then press the dial.
(5) Turn the SEL/PUSH EXEC dial to select the desired character, then press the dial.
(6) Repeat steps 4 and 5 until you have selected all characters and completed the title.
(7) To finish making your own titles, turn the SEL/PUSH EXEC dial to select [SET], then press the dial. The title is stored in memory.
(8) Press TITLE to make the title menu disappear.

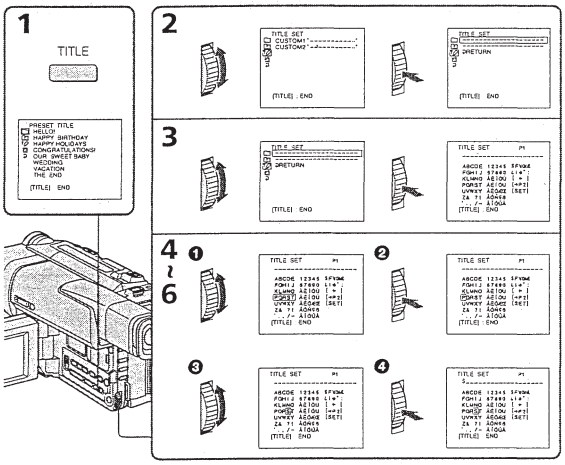

To change a title you have stored

In step 3, select CUSTOM1 or CUSTOM2, depending on which title you want to change, then press the SEL/PUSH EXEC dial. Turn the SEL/PUSH EXEC dial to select [←], then press the dial to delete the title. The last character is erased. Enter the new title as desired.

If you take 5 minutes or longer to enter characters in the standby mode while a cassette is in your camcorder

The power automatically goes off. The characters you have entered remain stored in memory. Turn STANDBY down once and then up again, then proceed from step 1. We recommend setting the POWER switch to VTR or removing the cassette so that your camcorder does not automatically turn off while you are entering title characters.

If you select [→P2]

The menu for selecting alphabet and Russian characters appear. Select [→P1] to return to the previous screen.

To delete the title

Select [←]. The last character is erased.

Using the built-in light

You can use the built-in light to suit your shooting situation. The recommended distance between the subject and camcorder is about 5 feet (1.5 m).

Slide LIGHT to ON while your camcorder is in the standby mode. The built-in light turns on.
The built-in light turns on/off by turning on/off STANDBY.

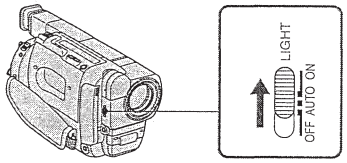

To turn off the built-in light

Slide LIGHT to OFF.

To turn on the built-in light automatically

Slide LIGHT to AUTO.
The built-in light automatically turns on and off according to the ambient brightness. However, the built-in light automatically turns off if the built-in light turns on for more than about 5 minutes. In this case, turn STANDBY down once and up again.

CAUTION

Be careful not to touch the lighting section, because the plastic window and surrounding surfaces are hot while the light is on. It remains hot for a while after the light is turned off.

DANGER

Not to be handled by children.
Emits intense heat and light.
Use with caution to reduce the risk of fire or injury to persons.
Do not direct light at persons or materials from less than 4 feet (1.22 m) during use and until cool.
Slide LIGHT to OFF when not in use.

Notes

- The battery pack is quickly discharging while the built-in light is turned on. Slide LIGHT to OFF when not in use.
- When you do not use your camcorder, slide LIGHT to OFF and remove the battery pack to avoid turning on the built-in light.
- When flickering occurs while shooting in the auto mode, slide LIGHT to ON.
- The built-in light may turn on/off when you use the PROGRAM AE or backlight function.
- The built-in light may be turned off when inserting or ejecting a cassette.
- While the end search function is working, the built-in light is turned off.

Replacing the bulb

Use the Sony XB-3D halogen lamp (not supplied). The supplied halogen lamp is not on the market. Purchase the Sony XB-3D halogen lamp.
Remove the power source before replacing the bulb.

(1) Remove the built-in light unit while pushing the hole under the built-in light unit using a wire.
(2) Turn the bulb housing counterclockwise and detach from the built-in light unit.
(3) Replace the bulb using a dry cloth.
(4) Attach the bulb housing turning it clockwise, then replace the built-in light unit.

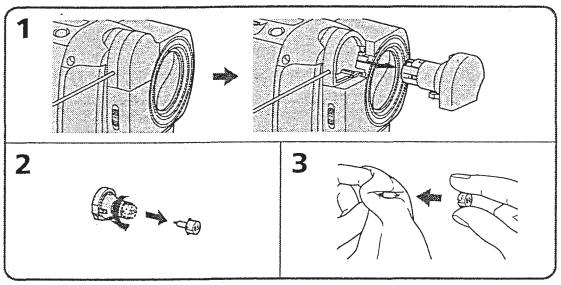

CAUTION

- When replacing the bulb, use only the Sony XB-3D halogen lamp (not supplied) to reduce the risk of fire.
- To prevent possible burn hazard, disconnect the power source before replacing and do not touch the bulb until the bulb becomes cool enough to handle (for about 30 minutes or more).

Note

To prevent the bulb from being smudged with finger prints, handle it with a dry cloth, etc. If the bulb is smudged, wipe it completely.

Playing back a tape with digital effects

During playback, you can process a scene using the digital effect functions: STILL, FLASH, LUMI. and TRAIL.

(1) During playback, press DIGITAL EFFECT and turn the SEL/PUSH EXEC dial until the desired digital effect indicator (STILL, FLASH, LUMI. or TRAIL) flashes.
(2) Press the SEL/PUSH EXEC dial.
The digital effect indicator lights up and the bars appear. In the STILL or LUMI. mode, the picture where you press the SEL/PUSH EXEC dial is stored in memory as a still picture.
(3) Turn the SEL/PUSH EXEC dial to adjust the effect.
For details of each digital effect function, see page 35.

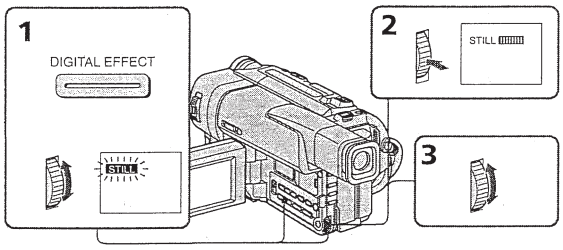

To cancel the digital effect function

Press DIGITAL EFFECT.

Notes

- You cannot record image-processed pictures on your camcorder. Record them on the VCR using your camcorder as a player.
- In various speed playback, noise appears on the picture. This is not a malfunction.

STILL and LUMI. modes

- You can search a picture to image-process by pressing ▶▶ or ◀◀ in the playback mode. However, noise appears on the picture.
- You cannot delete a picture stored in memory even if you stop playing back a tape.

When you set the POWER switch to OFF

The digital effect function is automatically canceled.

Dubbing a tape

You can dub and edit tapes using your camcorder for playback and another VCR for recording. Turn down the volume of your camcorder while editing. Otherwise, the picture may be distorted.

Connect your camcorder to the VCR using the A/V connecting cable supplied with your camcorder.
Set the input selector on the VCR to LINE, if available.

(1) Insert a blank tape (or a tape you want to record over) into the VCR, and insert the recorded tape into your camcorder.
(2) Set the POWER switch to VTR.
(3) Play back the recorded tape on your camcorder.
(4) Start recording on the VCR.

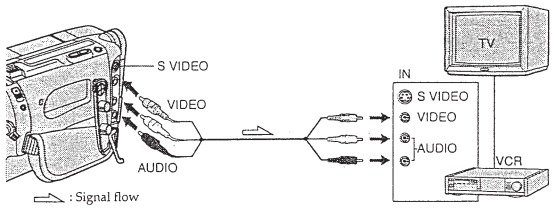

When you have finished dubbing a tape

Press ■ on both your camcorder and the VCR.

To prevent deterioration of pictures from dubbing

Set EDIT to ON in the MENU settings before dubbing

If you have displayed the screen indicators on the TV

Make the indicators disappear by pressing DISPLAY so that they will not be superimposed on the edited tape.

You can edit on VCRs that support the following systems

8 8 mm, Hi8 Hi8, VHS VHS, S-VHS S-VHS, VHSC VHSC, S-VHSC S-VHSC, Β Betamax, ED Beta ED Betamax, mini DV mini DV or DV DV

If your VCR is a monaural type

Connect the yellow plug for video and the white plug for audio on both your camcorder and the VCR. You do not need to connect the red plug. With this connection, the sound will be monaural.

Connect using an S video cable (not supplied) to obtain high-quality pictures

With this connection, you do not need to connect the yellow (video) plug of the A/V connecting cable.
Connect an S video cable (not supplied) to the S video jacks of both your camcorder and the VCR.

Recording video or TV programs

You can record a tape from another VCR or a TV program from a TV that has video/audio outputs. Use your camcorder as a recorder. Turn down the volume of your camcorder while editing. Otherwise, the picture may be distorted.

(1) Insert a blank tape (or a tape you want to record over) into your camcorder. If you are recording a tape from the VCR, insert a recorded tape into the VCR.
(2) Set the POWER switch to VTR.
(3) Set DISPLAY to LCD in the MENU settings (p. 51). The picture from a TV or VCR appears in the viewfinder or on the LCD screen.
(4) Press ● REC and the button on its right simultaneously on your camcorder, then immediately press II on your camcorder.
(5) Press ► on the VCR to start playback if you are recording a tape from VCR. Select a TV program if you are recording from TV.
(6) Press II on your camcorder at the scene where you want to start recording from.

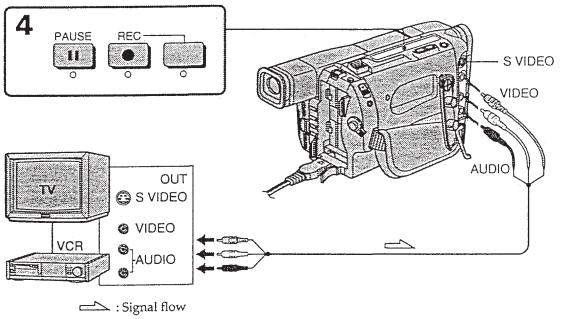

Note

You cannot record dual sound broadcasts.

If your VCR is a monaural type

Connect the yellow plug for video and the white plug for audio on both your camcorder and the VCR (you do not need to connect the red plug). With this connection, the sound will be monaural.

Connect using an S video cable (not supplied) to obtain high-quality pictures

With this connection, you do not need to connect the yellow (video) plug of the A/V connecting cable.
Connect an S video cable (not supplied) to the S video jacks of both your camcorder and VCR.

If your VCR or TV does not have an S VIDEO OUT jack

Do not connect an S video cable (not supplied) to your camcorder. If you connect an S video cable, the picture may not appear on screen.

Changing the MENU settings

To change the mode settings in the MENU settings, select the menu items with the SEL/PUSH EXEC dial. The factory settings can be partially changed. First, select the icon, then the menu item and then the mode.

(1) In the standby or VTR mode, press MENU.
(2) Turn the SEL/PUSH EXEC dial to select the desired icon, then press the dial to set.
(3) Turn the SEL/PUSH EXEC dial to select the desired item, then press the dial to set.
(4) Turn the SEL/PUSH EXEC dial to select the desired mode, and press the dial to set.
(5) If you want to change other items, select ⮐ RETURN and press the dial, then repeat steps from 2 to 4.
For details, see "Selecting the mode setting of each item" (p. 52).

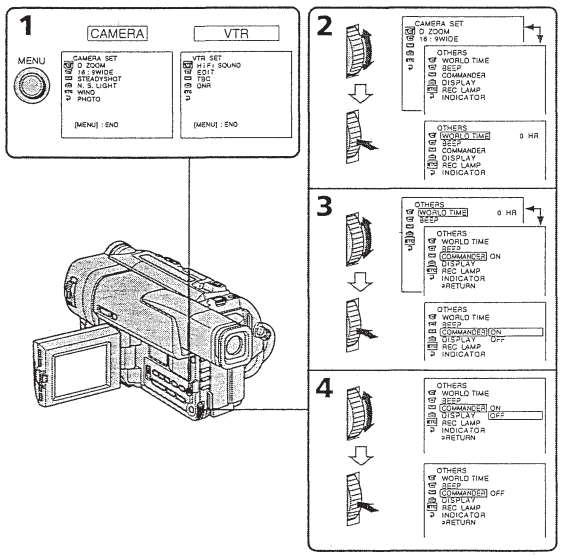

To make the MENU display disappear

Press MENU.

Note
When you let the subject monitor the shot (Mirror mode), the menu display does not appear.

Menu items are displayed as the following six icons:
- CAMERA SET
- VTR SET
- LCD SET
- TAPE SET
- SETUP MENU
- OTHERS

Selecting the mode setting of each item

● is the factory setting.

Menu items differ according to whether the POWER switch is set to VTR or CAMERA.

Icon/item	Mode	Meaning	POWER switch
D ZOOM	ON	To activate digital zoom. More than 20× to 360× zoom is performed digitally (p. 16)	CAMERA
	● OFF	To prevent the deterioration of the picture quality	
16:9WIDE	● OFF	—	CAMERA
	CINEMA	To record in the CINEMA mode (p. 29)	
	16:9FULL	To record in the 16:9FULL mode	
STEADYSHOT	● ON	To compensate for camera-shake	CAMERA
	OFF	To cancel the SteadyShot function. Natural pictures are produced when shooting a stationary object with a tripod.	
N.S. LIGHT	● ON	To use the NightShot Light function (p. 19)	CAMERA
	OFF	To cancel the NightShot Light function	
WIND	● OFF	—	CAMERA
	ON	To reduce wind noise when recording in strong wind	
PHOTO	● NORMAL	To activate the normal photo function	CAMERA
	FADE	To activate the fade photo function	
	SHUTTER	To activate the shutter photo function	

Notes on the SteadyShot function
- The SteadyShot function will not correct excessive camera-shake.
- Attachment of a conversion lens (not supplied) may influence the SteadyShot function.
- SteadyShot does not operate in the 16:9FULL mode. If you set STEADYSHOT to ON in the MENU settings, the "☞" indicator flashes.

Icon/item	Mode	Meaning	POWER switch
HiFi SOUND	● STEREO	To play back a stereo tape or dual sound track tape	VTR
	1	To play back a monaural tape or dual sound track tape with main sound	
	2	To play back a dual sound track tape with sub sound	
EDIT	● OFF	—	VTR
	ON	To minimize picture deterioration when editing	
TBC	● ON	To correct jitter	VTR
	OFF	To not correct jitter. Set TBC to OFF when playing back a tape on which you have dubbed over and recorded the signal of a TV game or similar machine.	
TBC stands for "Time Base Corrector".			
DNR	● ON	To reduce picture noise	VTR
	OFF	To reduce a conspicuous afterimage when the picture has a lot of movement	
DNR stands for "Digital Noise Reduction".			
LCD B. L.	● BRT NORMAL	To set the brightness on the LCD screen normal	VTR CAMERA
	BRIGHT	To brighten the LCD screen	
LCD COLOR		To adjust the color on the LCD screen, turn and press the SEL/PUSH EXEC dial To lighten ◄——► To darken	VTR CAMERA

In more than 5 minutes after removing the power source
The "WIND" "COMMANDER" "EDIT" and "HiFi SOUND" items are returned to their factory settings.
The other menu items are held in memory even when the battery is removed, as long as the lithium battery is installed.

Notes on LCD B.L.
- When you select "BRIGHT", battery life is reduced by about 10 percent during recording.
- When you use power sources other than the battery pack, "BRIGHT" is automatically selected.

Icon/item	Mode	Meaning	POWER switch
REC MODE	● SP	To record in SP (Standard Play) mode	VTR CAMERA
	LP	To increase the recording time to twice the SP mode	
ORC TO SET		To automatically adjust the recording condition to get the best possible recording Press START/STOP to start adjustment Your camcorder takes about 10 seconds to check the tape condition and then returns to the Standby mode.	CAMERA
ORC stands for "Optimizing the Recording Condition".			
REMAIN	● AUTO	To display the remaining tape bar: • for about 8 seconds after your camcorder is turned on and calculates the remaining amount of tape • for about 8 seconds after a cassette is inserted and your camcorder calculates the remaining amount of tape • for about 8 seconds after ► is pressed in VTR mode • for about 8 seconds after DISPLAY is pressed to display the screen indicators • for the period of tape rewinding, forwarding or picture search in the VTR mode	VTR CAMERA
	ON	To always display the remaining tape indicator	

Notes on the LP mode
- When you record a tape in the LP mode on your camcorder, we recommend playing the tape on your camcorder. When you play back the tape on other camcorders or VCRs, noise may occur in pictures or sound.
- Noise may occur also when you play on your camcorder tapes recorded in the LP mode on other camcorders or VCRs.
- When you record a tape in the LP mode on your camcorder, recording is carried out in the standard 8 mm system.

Notes on ORC setting
- Each time you eject the cassette, the ORC setting will be canceled. If necessary, reset the setting.
- You cannot use this setting on a tape with the red mark on the cassette exposed. (i. e. the tape is write-protected)
- When you set ORC TO SET, a non-recorded section of about 0.1 seconds appears on the tape. However, note that this non-recorded section disappears from the tape when you continue recording from this section.
- To check if you have already set the ORC setting, select ORC TO SET in the MENU settings. "ORC ON" is displayed if ORC TO SET is already set.

Icon/item	Mode	Meaning	POWER switch
CLOCK SET		To reset the date or time (p. 57)	CAMERA
AUTO DATE	● ON	To record the date for 10 seconds after recording has started	CAMERA
	OFF	To cancel the auto date function	
AUTO TV ON	● OFF	—	VTR CAMERA
	ON	To automatically turn on the Sony TV when using the laser link function (p. 26)	
TV INPUT	● VIDEO1 VIDEO2 VIDEO3	To switch the video input on a Sony TV when using the laser link function (p 26)	VTR CAMERA
	OFF	—	
LTR SIZE	● NORMAL	To display selected menu items in normal size	VTR CAMERA
	2×	To display selected menu items at twice the normal size	
DEMO MODE	● ON	To make the demonstration appear	CAMERA
	OFF	To cancel the demonstration mode	

Notes on DEMO MODE
- You cannot select DEMO MODE when a cassette is inserted in your camcorder.
- DEMO MODE is set to STBY (Standby) at the factory and the demonstration starts about 10 minutes after you have set the POWER switch to CAMERA without a cassette inserted.
  Note that you cannot select STBY of DEMO MODE in the MENU settings.
- When NIGHTSHOT is set to ON, "NIGHTSHOT" appears in the viewfinder or on the LCD screen and you cannot select DEMO MODE in the MENU settings.

Changing the MENU settings

Icon/item	Mode	Meaning	POWER switch
WORLD TIME		To set the clock to the local time. Turn the SEL/PUSH EXEC dial to set a time difference. The clock changes by the time difference you set here. If you set the time difference to 0, the clock returns to the originally set time.	CAMERA
BEEP	● MELODY	To output the melody when you start/stop recording or when an unusual condition occurs on your camcorder	VTR CAMERA
	NORMAL	To output the beep sound instead of the melody	
	OFF	To cancel the melody and beep sound	
COMMANDER	● ON	To activate the Remote Commander supplied with your camcorder	VTR CAMERA
	OFF	To deactivate the Remote Commander to avoid remote control misoperation caused by other VCR's remote control	
DISPLAY	● LCD	To show the display on the LCD screen and viewfinder	VTR CAMERA
	V-OUT/LCD	To show the display on the TV screen, LCD screen and viewfinder	
REC LAMP	● ON	To light up the camera recording lamp at the front of your camcorder	CAMERA
	OFF	To turn the camera recording lamp off so that the subject is not aware of the recording	
INDICATOR	● BL OFF	To turn off the backlight on display window	VTR CAMERA
	BL ON	To turn on the backlight	

Note
If you press DISPLAY with "DISPLAY" set to "V-OUT/LCD" in the MENU settings, the picture from a TV or VCR will not appear on the LCD screen even when your camcorder is connected to outputs on the TV or VCR.

Notes on INDICATOR
- When you select "BL ON", battery life is reduced by about 10 percent during recording
- When you use power sources other than the battery pack, "BL ON" is automatically selected.

Resetting the date and time

To check the preset date and time
Press DATE to display the date indicator.
Press TIME to display the time indicator.
Press DATE (or TIME) and then press TIME (or DATE) to simultaneously display the date and time indicator.
Press DATE and/or TIME again. The date and/or time indicator disappears.

The year changes as follows:

1998 ⟷ 1999 ⟵ ···· ⟶ 2029

Auto date function
When you use your camcorder for the first time, turn it on and reset the date and time to your time before you start recording (p. 57). The date is automatically recorded for 10 seconds after you start recording (**Auto date function**). This function works only once a day.

Note on the time indicator
The internal clock of your camcorder operates on a 12-hour cycle.
- 12:00 AM stands for midnight.
- 12:00 PM stands for noon.

Note on the auto date function
You can change the AUTO DATE setting by selecting ON or OFF in the MENU settings.
The auto date function automatically displays the date once a day.
However, the date may automatically appear more than once a day if:
– you reset the date and time.
– you eject and insert the tape again.
– you stop recording within 10 seconds.
– you set AUTO DATE to OFF once and set it back ON in the MENU settings.

Resetting the date and time

The clock is set to East Coast Standard Time at the factory.
The date and time are held in memory by the lithium battery. If you replace the lithium battery with the battery pack or other power source connected, you need not reset the date and time.
You must reset the date and time when the lithium battery becomes dead with no power source installed.
First, set the year, then the month, the day, the hour and then the minute.
(1) While the camcorder is in the standby mode, press MENU to display the MENU settings.
(2) Turn the SEL/PUSH EXEC dial to select 🖴, then press the dial.
(3) Turn the SEL/PUSH EXEC dial to select CLOCK SET, then press the dial.
(4) Turn the SEL/PUSH EXEC dial to adjust the desired year, then press the dial
(5) Set the month, day and hour by turning the SEL/PUSH EXEC dial and pressing the dial.
(6) Set the minute by turning the SEL/PUSH EXEC dial and pressing the dial by the time signal. The clock starts to move.
(7) Press MENU to make the MENU settings disappear The time indicator appears. Press TIME to make the time indicator disappear.

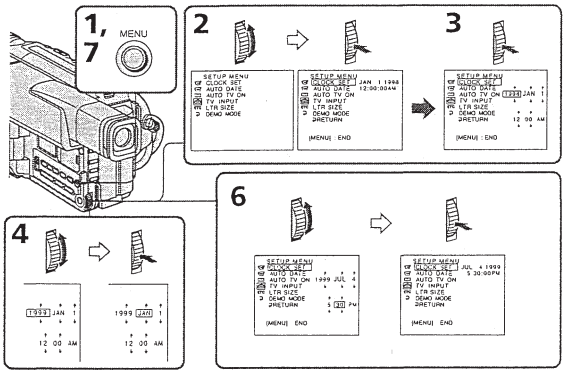

— Additional Information —

Usable cassettes and playback modes

Selecting the cassette type

You can use either Hi8 or standard 8 mm video cassettes on your camcorder. When you use a Hi8 video cassette, recording and playback are carried out in the Hi8 system.
When you use a standard 8 mm video cassette, recording and playback are carried out in the standard 8 mm system.
However, if you record on a Hi8 video cassette in the LP mode, recording is carried out in the standard 8 mm system.
If you play back a tape recorded on a different video recorder on your camcorder, the Playback mode is automatically selected according to the format in which the tape has been recorded.

This Hi8 system is an extension of the standard 8 mm system, and was developed to produce higher quality pictures.
You cannot playback a tape recorded in the Hi8 system correctly on video recorder/players other than a Hi8 video recorder/player.

What is video Hi8 XR ?
"video Hi8 XR" is a function that further enhances the image quality of video Hi8. This function allows you to record and playback pictures with clearer details.
Video tapes recorded on a camcorder having the "XR" function show excellent picture quality when they are played back on an "XR" camcorder.
The playback quality will be the normal quality of the Hi8 camcorder when video tapes recorded on an "XR" camcorder are played back by a conventional Hi8 camcorder or when video tapes recorded on a conventional Hi8 camcorder are played back on the "XR" camcorder.
* "XR" stands for "Extended Resolution."

When you play back

The Playback mode (SP/LP) and system (Hi8/standard 8 mm) are automatically selected according to the format in which the tape has been recorded. The quality of the recorded picture in the LP mode, however, will not be as good as the SP mode.

Note on AFM HiFi stereo
When you play back a tape, the sound will be monaural if:
- You record the tape on your camcorder, then play it back on an AFM HiFi monaural video recorder/player.
- You record the tape on an AFM HiFi monaural video recorder, then play it back on your camcorder.

Foreign 8 mm video
Because TV color systems differ from country to country, you may not be able to play back foreign pre-recorded tapes. Refer to "Using your camcorder abroad" to check the TV color systems used in foreign countries.

Copyright signal

When you record
You cannot record software on your camcorder that contains copyright control signals for copyright protection of software.
"COPY INHIBIT" appears on the LCD screen, in the viewfinder or on the TV screen if you try to record such software.
Your camcorder does not record copyright control signals on the tape when it records.

Usable cassettes and playback modes

When you playback a dual sound track tape

When you play back a dual sound track tape recorded in an AFM HiFi stereo system, set "HiFi SOUND" to the desired mode in the MENU settings (p. 51).

Sound from speaker

HiFi Sound Mode	Playing back a stereo tape	Playing back a dual sound track tape
STEREO	Stereo	Main sound and sub sound
1	Monaural	Main sound
2	Unnatural sound	Sub sound

You cannot record dual sound programs on your camcorder.

Changing the lithium battery in your camcorder

When replacing the lithium battery, keep the battery pack or other power source attached. Otherwise, you will need to reset the date, time and other items in the MENU settings hold in memory by the lithium battery.

Insert the battery with the positive (+) side facing out. When the battery becomes weak or dead, the ⚠ indicator flashes in the viewfinder for about 5 seconds when you set the POWER switch to CAMERA. In this case, **replace the battery with a Sony CR2025 or Duracell DL-2025 lithium battery. Use of any other battery may present a risk of fire or explosion.**

Lithium battery
- Keep the lithium battery out of the reach of children.
- Should the battery be swallowed, immediately consult a doctor.
- Wipe the battery with a dry cloth to ensure good contact.
- The battery may explode if mistreated. Do not recharge, disassemble, nor dispose of it in fire. Discard used batteries according to the manufacturer's instructions.

Lithium battery installed at the factory
This battery may not last 1 year.

Changing the lithium battery in your camcorder

Changing the lithium battery

(1) Open the LCD panel and open the lid of the lithium battery compartment.
(2) Push the lithium battery down once and pull it out from the holder.
(3) Install a Sony CR2025 or Duracell DL-2025 lithium battery with the positive (+) side facing out.
(4) Close the lid.

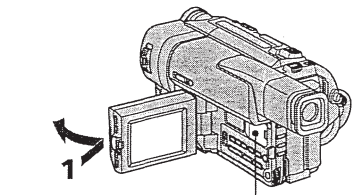

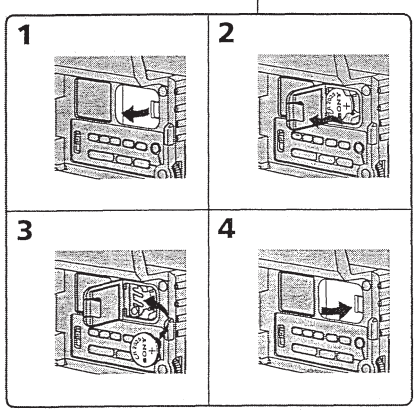

Troubleshooting

If you run into any problem using your camcorder, use the following table to troubleshoot the problem. If the problem persists, disconnect the power source and contact your Sony dealer or local authorized Sony service facility. If "C:□□:□□" appears on the LCD screen or in the viewfinder, the self-diagnosis display function has worked. See page 66.

In the recording mode

Symptom	Cause and/or Corrective Actions
START/STOP does not operate.	• The POWER switch is set to VTR. → Set it to CAMERA. (p. 13) • The tape has run out. → Rewind the tape or insert a new one. (p. 12, 22) • The write-protect tab is set to expose the red mark. → Use a new tape or slide the tab. (p. 12) • The tape is stuck to the drum (moisture condensation). → Remove the cassette and leave your camcorder for at least 1 hour to acclimatize. (p. 69)
Recording stops in a few seconds.	• START/STOP MODE is set to 5SEC or ⊥. → Set it to ⊼. (p. 17)
The power goes off.	• While being operated in the CAMERA mode, your camcorder has been in the standby mode for more than 5 minutes. → Turn STANDBY down once and then up again. (p. 13)
The image on the viewfinder screen is not clear.	• The viewfinder lens is not adjusted. → Adjust the viewfinder lens. (p. 15)
The SteadyShot function does not work.	• STEADYSHOT is set to OFF in the MENU settings. → Set it to ON. (p. 51) • The SteadyShot function does not work when the wide mode is set to 16:9FULL.
The autofocusing function does not work.	• FOCUS is set to MANUAL. → Set it to AUTO. (p. 41) • Shooting conditions are not suitable for autofocus. → Set FOCUS to MANUAL to focus manually. (p. 41)
The fader function does not work.	• START/STOP MODE is set to 5SEC or ⊥. → Set it to ⊼. (p. 17) • The digital effect function is working. → Cancel it. (p. 35)
The ⊗ indicator flashes in the viewfinder.	• The video heads may be dirty. → Clean the heads using the Sony V8-25CLD cleaning cassette (not supplied). (p. 70)
The picture does not appear in the viewfinder.	• The LCD panel is open. → Close the LCD panel. (p. 14)

(Continued on the following page)

Symptom	Cause and/or Corrective Actions
A vertical band appears when you shoot a subject such as lights or a candle flame against a dark background.	• The contrast between the subject and background is too high. Your camcorder is not a malfunction.
A vertical band appears when you shoot a very bright subject.	• Your camcorder is not a malfunction.
Some tiny white spots appear in the viewfinder or on the LCD screen.	• Slow shutter, low lux or NightShot +Slow shutter mode is activated. This is not a malfunction.
An unknown picture is displayed in the viewfinder or on the LCD screen.	• If 10 minutes elapse after you set the POWER switch to CAMERA or DEMO MODE is set to ON in the MENU settings without a cassette inserted, your camcorder automatically starts the demonstration. → Insert a cassette and the demonstration stops. You can also cancel DEMO MODE. (p. 55)
The picture is recorded in incorrect or unnatural colors.	• NIGHTSHOT is set to ON. → Set it to OFF. (p. 18)
Picture appears too bright, and the subject does not appear in the viewfinder or on the LCD screen.	• NIGHTSHOT is set to ON in a bright place. → Set it to OFF, or use the NightShot function in a dark place. (p. 18)

In the playback mode

Symptom	Cause and/or Corrective Actions
The tape does not move when a video control button is pressed.	• The POWER switch is set to CAMERA or OFF. → Set it to VTR. (p. 22) • The tape has run out. → Rewind the tape. (p. 22)
The playback picture is not clear or does not appear.	• The television's video channel is not adjusted correctly. → Adjust it. (p. 25) • EDIT is set to ON in the MENU settings. → Set it to OFF. (p. 51) • The video head may be dirty. → Clean the heads using the Sony V8-25CLD cleaning cassette (not supplied). (p. 70)
No sound or only a low sound is heard when playing back a tape.	• The stereo tape is played back with HiFi SOUND set to 2 in the MENU settings. → Set it to STEREO. (p. 51) • The volume is turned to minimum. → Open the LCD panel and press VOLUME +. (p. 22)

In the recording and playback modes

Symptom	Cause and/or Corrective Actions
The power does not turn on.	• The battery pack is not installed, or is dead or nearly dead. → Install a charged battery pack. (p. 8, 9) • The AC power adaptor is not connected to a wall outlet. → Connect the AC power adaptor to a wall outlet. (p. 4, 11)
The end search function does not work.	•The tape was ejected after recording. •You have not recorded on the new cassette yet.

Symptom	Cause and/or Corrective Actions
The battery pack is quickly discharged.	• Your camcorder does not operate when you use a battery pack that is not an "InfoLITHIUM" battery pack. → Use an "InfoLITHIUM" battery pack. (p. 11) • The operating temperature is too low. • The battery pack is not fully charged. → Charge the battery pack again. (p. 9) • The battery pack is completely dead, and cannot be recharged. → Replace with a new battery pack. (p. 8)
The battery remaining indicator does not indicate the correct time.	• You have used the battery pack in an extremely hot or cold environment for a long time. • The battery pack is completely dead, and cannot be recharged. → Replace with a new battery pack. (p. 8) • The battery is dead. → Use a charged battery pack. (p. 8, 9)
The cassette cannot be removed from the holder.	• The power source is disconnected. → Connect it firmly. (p. 8, 11) • The battery is dead. → Use a charged battery pack or the AC power adaptor. (p. 8, 9)
The ⊡ and ⏏ indicators flash and no functions except for cassette ejection work.	• Moisture condensation has occurred. → Remove the cassette and leave your camcorder for at least 1 hour to acclimatize. (p. 69)

Others

Symptom	Cause and/or Corrective Actions
The Remote Commander supplied with your camcorder does not work.	• COMMANDER is set to OFF in the MENU settings. → Set it to ON. (p. 51) • Something is blocking the infrared rays. → Remove the obstacle. • The batteries inserted in the battery holder with the + – polarities incorrectly matching the + – marks. → Insert the batteries with the correct polarity. (p. 79) • The batteries are dead. → Insert new ones. (p. 79)
The date or time indicator does not appear, and the bars "–:–:–" appear.	• Reset the date and time. (p. 57)
The picture from a TV or VCR does not appear even when your camcorder is connected to outputs on the TV or VCR.	• DISPLAY is set to V-OUT/LCD in the MENU settings. → Set it to LCD. (p. 51)
The melody or beep sounds for 5 seconds.	• Moisture condensation has occurred. → Remove the cassette and leave your camcorder for at least 1 hour to acclimatize. (p. 69) • Some troubles has occurred in your camcorder. → Remove the cassette and insert it again, then operate your camcorder.
While charging the battery pack, no indicator appears or the indicator flashes in the display window.	• The AC power adaptor is disconnected. → Connect it firmly. (p. 9) • Something is wrong with the battery pack. → Contact your Sony dealer or local authorized Sony service facility.

Self-diagnosis display

Your camcorder has a self-diagnosis display function.
This function displays the current condition of your camcorder as a 5-digit code (a combination of a letter and figures) in the viewfinder, on the LCD screen or in the display window. If a 5-digit code is displayed, check the following code chart. The last two digits (indicated by □□) will differ depending on the state of your camcorder.

Viewfinder (or LCD screen)

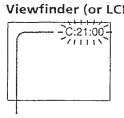

Self-diagnosis display
•C:□□:□□
You can service your camcorder yourself.
•E:□□:□□
Contact your Sony dealer or local authorized Sony facility.

Five-digit display	Cause and/or Corrective Actions
C:04:□□	• You are using a battery pack that is not an "InfoLITHIUM" battery pack. → Use an "InfoLITHIUM" battery pack. (p. 11)
C:21:□□	• Moisture condensation has occurred. → Remove the cassette and leave your camcorder for at least 1 hour to acclimatize. (p. 69)
C:22:□□	• The video heads are dirty. → Clean the heads using the Sony V8-25CLD cleaning cassette (not supplied). (p. 70)
C:31:□□ C:32:□□	• A malfunction other than the above that you can service has occurred. → Remove the cassette and insert it again, then operate your camcorder. → Disconnect the power cord of the AC power adaptor or remove the battery pack. After reconnecting the power source, operate your camcorder.
E:61:□□ E:62:□□	• A malfunction that you cannot service has occurred. → Contact your Sony dealer or local authorized Sony service facility and inform them of the 5-digit code. (example: E:61:10)

If you are unable to rectify the problem even if you try corrective actions a few times, contact your Sony dealer or local authorized Sony service facility.

Warning indicators and messages

If indicators and messages appear in the viewfinder, on the LCD screen or in the display window, check the following:
See the page in parentheses "( )" for more information.
• The warning messages do not appear in the mirror mode.
• The indicators and messages are displayed in yellow.

Warning indicators

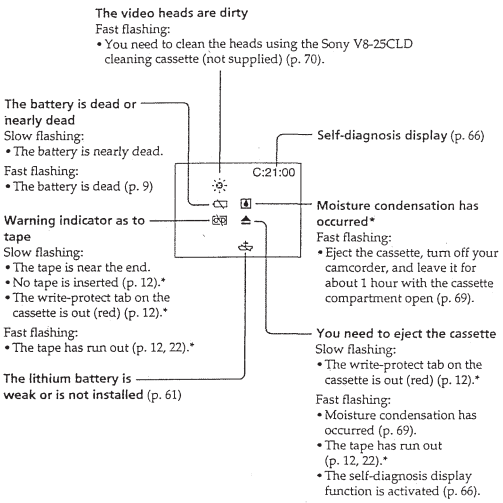
The video heads are dirty
Fast flashing:
• You need to clean the heads using the Sony V8-25CLD cleaning cassette (not supplied) (p. 70).
The battery is dead or nearly dead
Slow flashing:
• The battery is nearly dead.
Fast flashing:
• The battery is dead (p. 9)
Self-diagnosis display (p. 66)
C:21:00
Warning indicator as to tape
Slow flashing:
• The tape is near the end.
• No tape is inserted (p. 12).*
• The write-protect tab on the cassette is out (red) (p. 12).*
Fast flashing:
• The tape has run out (p. 12, 22).*
Moisture condensation has occurred*
Fast flashing:
• Eject the cassette, turn off your camcorder, and leave it for about 1 hour with the cassette compartment open (p. 69).
You need to eject the cassette
Slow flashing:
• The write-protect tab on the cassette is out (red) (p. 12).*
Fast flashing:
• Moisture condensation has occurred (p. 69).
• The tape has run out (p. 12, 22).*
• The self-diagnosis display function is activated (p. 66).
The lithium battery is weak or is not installed (p. 61)

Warning messages

CLEANING CASSETTE	The video heads are dirty.
COPY INHIBIT	You tried to record a picture that has a copyright control signal (p. 59).

* You hear the melody or beep sound.

Using your camcorder abroad

Using your camcorder abroad

You can use your camcorder in any country or area with the AC power adaptor supplied with your camcorder within 100 V to 240 V AC, 50/60 Hz.
When charging the battery pack, use a commercially available AC plug adaptor **[a]**, if necessary, depending on the design of the wall outlet **[b]**.

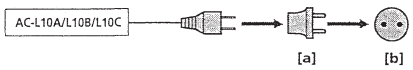

Your camcorder is an NTSC system based camcorder. If you want to view the playback picture on a TV, it must be an NTSC system based TV with VIDEO/AUDIO input jack. The following shows TV color systems used overseas.

NTSC system
Bahama Islands, Bolivia, Canada, Central America, Chile, Colombia, Ecuador, Jamaica, Japan, Korea, Mexico, Peru, Surinam, Taiwan, the Philippines, the U.S.A., Venezuela, etc.

PAL system
Australia, Austria, Belgium, China, Czech Republic, Denmark, Finland, Germany, Great Britain, Holland, Hong Kong, Italy, Kuwait, Malaysia, New Zealand, Norway, Portugal, Singapore, Slovak Republic, Spain, Sweden, Switzerland, Thailand, etc.

PAL-M system
Brazil

PAL-N system
Argentina, Paraguay, Uruguay

SECAM system
Bulgaria, France, Guyana, Hungary, Iran, Iraq, Monaco, Poland, Russia, Ukraine, etc.

Simple setting of clock by time difference

You can easily set the clock to the local time by setting a time difference. Select WORLD TIME in the MENU settings. See page 56 for more information.

Maintenance information and precautions

Moisture condensation

If your camcorder is brought directly from a cold place to a warm place, moisture may condense inside your camcorder, on the surface of the tape, or on the lens. In this condition, the tape may stick to the head drum and be damaged or your camcorder may not operate correctly. If there is moisture inside your camcorder, the beep sounds and the 4 indicator flashes. When the ⏏ indicator flashes at the same time, the cassette is inserted in your camcorder. If moisture condenses on the lens, the indicator will not appear.

If moisture condensation occurred

None of the functions except cassette ejection will work. Eject the cassette, turn off your camcorder, and leave it for about 1 hour with the cassette compartment open. Your camcorder can be used again if the 4 indicator does not appear when the power is turned on again.

Note on moisture condensation
Moisture may condense when you bring your camcorder from a cold place into a warm place (or vice versa) or when you use your camcorder in a hot place as follows:
- You bring your camcorder from a ski slope into a place warmed up by a heating device
- You bring your camcorder from an air-conditioned car or room into a hot place outside
- You use your camcorder after a squall or a shower
- You use your camcorder in a high temperature and humidity place

How to prevent moisture condensation
When you bring your camcorder from a cold place into a warm place, put your camcorder in a plastic bag and tightly seal it. Remove the bag when the air temperature inside the plastic bag has reached the surrounding temperature (after about 1 hour).

Maintenance information

Cleaning the video head

To ensure normal recording and clear pictures, clean the video heads. The video head may be dirty when:
- The ⊠ indicator and "CLEANING CASSETTE" message appear one after another or the ⊠ indicator flashes on the LCD screen or in the viewfinder.
- Playback pictures contain noise.
- Playback pictures are hardly visible.
- Playback pictures do not appear.

If this happens, clean the video heads with the Sony V8-25CLD cleaning cassette (not supplied).

[a] Slightly dirty
[b] Very dirty

Note on video heads
When the playback pictures are still contain noise even if you have cleaned the video heads with a cleaning cassette, the video heads may have worn down due to long use. If this is the case, they must be replaced with new heads. Contact your Sony dealer or local authorized Sony service facility.

Cleaning the LCD screen

If fingerprints or dust make the LCD screen dirty, we recommend using a LCD Cleaning Kit (not supplied) to clean the LCD screen.

Removing dust from inside the viewfinder

(1) ①Remove the screw with a screwdriver (not supplied). ②Then, while sliding the RELEASE knob, ③turn the eyecup in the direction of the arrow and pull it out.
(2) Clean the surface with a commercially available blower for a still camera.
(3) Reattach the eyecup and replace the screw.

Caution
Do not remove any other screws. You may remove only the screw to remove the eyecup.

Precautions

Camcorder operation

- Operate your camcorder on 7.2 V (battery pack) or 8.4 V (AC power adaptor).
- For DC or AC operation, use the accessories recommended in this operating instructions.
- If any solid object or liquid get inside the casing, unplug your camcorder and have it checked by a Sony dealer before operating it any further.
- Avoid rough handling or mechanical shock. Be particularly careful of the lens.
- Keep the POWER switch set to OFF when you are not using your camcorder.
- Do not wrap your camcorder with a towel, for example, and operate it. Doing so might cause heat to build up inside.
- Keep your camcorder away from strong magnetic fields or mechanical vibration.
- Do not touch the LCD screen with your fingers or a sharp-pointed object.
- If your camcorder is used in a cold place, a residual image may appear on the LCD screen. This is not a malfunction.
- While using your camcorder, the back of the LCD screen may heat up. This is not a malfunction.

Built-in light

- Do not knock or jolt the built-in light while it is turned on as it may damage the bulb or shorten the life of the bulb.
- Do not leave the built-in light on while it is resting on or against something; it may cause a fire or damage the built-in light.

On handling tapes

Do not insert anything into the small holes on the rear of the cassette. These holes are used to sense the type and thickness of the tape and if the recording tab is in or out.

Camcorder care

- When your camcorder is not to be used for a long time, remove the tape and battery. Periodically turn on the power, operate the CAMERA and VTR sections and play back a tape for about 3 minutes.
- Clean the lens with a soft brush to remove dust. If there are fingerprints on the lens, remove them with a soft cloth.
- Clean the camcorder body with a dry soft cloth, or a soft cloth lightly moistened with a mild detergent solution. Do not use any type of solvent which may damage the finish.
- Do not let sand get into your camcorder. When you use your camcorder on a sandy beach or in a dusty place, protect it from the sand or dust. Sand or dust may cause your camcorder to malfunction, and sometimes this malfunction cannot be repaired.

Maintenance information and precautions

AC power adaptor

- Unplug the unit from the wall outlet when you are not using the unit for a long time. To disconnect the power cord, pull it out by the plug. Never pull the power cord itself.
- Do not operate the unit with a damaged cord or if the unit has been dropped or damaged.
- Do not bend the power cord forcibly, or place a heavy object on it. This will damage the cord and may cause fire or electrical shock.
- Prevent metallic objects from coming into contact with the metal parts of the connecting section. If this happens, a short may occur and the unit may be damaged.
- Always keep metal contacts clean.
- Do not disassemble the unit.
- Do not apply mechanical shock or drop the unit.
- While the unit is in use, particularly during charging, keep it away from AM receivers and video equipment. AM receivers and video equipment disturb AM reception and video operation.
- The unit becomes warm during use. This is not a malfunction.
- Do not place the unit in locations that are:
  - Extremely hot or cold
  - Dusty or dirty
  - Very humid
  - Vibrating

Notes on dry batteries

To avoid possible damage from battery leakage or corrosion, observe the following:

- Be sure to insert the batteries with the + – polarities matched to the + – marks.
- Dry batteries are not rechargeable.
- Do not use a combination of new and old batteries.
- Do not use different types of batteries.
- Current flows from batteries when you are not using them for a long time.
- Do not use leaking batteries.

If batteries are leaking

- Wipe off the liquid in the battery compartment carefully before replacing the batteries.
- If you touch the liquid, wash it off with water.
- If the liquid get into your eyes, wash your eyes with a lot of water and then consult a doctor.

If any problem occurs, unplug your camcorder and contact your nearest Sony dealer.

Identifying the parts and controls

Camcorder

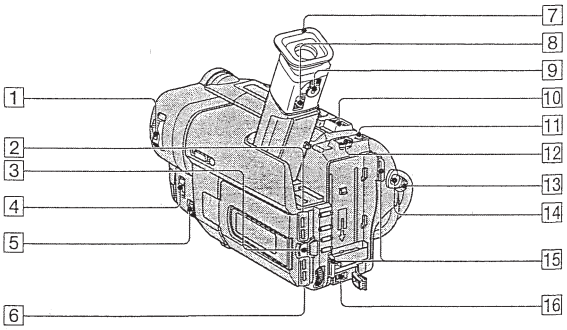

1 POWER switch (p. 13)
2 LCD BRIGHT buttons (p. 14)
3 OPEN button (p. 13)
4 FOCUS switch (p. 41)
5 NEAR/FAR dial (p. 41)
6 VOLUME buttons (p. 22)
7 Eyecup
8 Eyecup RELEASE knob (p. 70)
9 Viewfinder lens adjustment lever (p. 15)
10 Power zoom lever (p. 16)
11 PHOTO button (p. 27)
12 BATT RELEASE lever (p. 8)
13 STANDBY switch (p. 13)
14 START/STOP button (p. 13)
15 Hook for shoulder strap
16 DC IN jack (p. 4, 9)

This mark indicates that this product is a genuine accessory for Sony video products.
When purchasing Sony video products, Sony recommends that you purchase accessories with this "GENUINE VIDEO ACCESSORIES" mark.

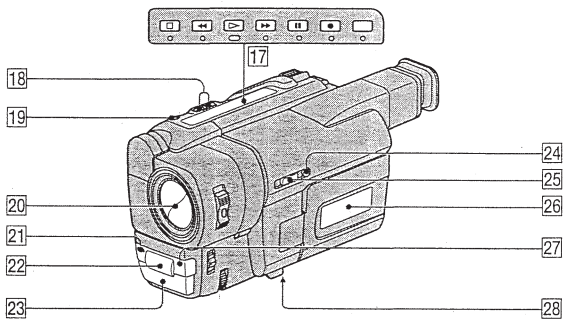

17 Video control buttons (p. 22, 24, 50)
■ STOP (stop)
◄◄ REW (rewind)
► PLAY (playback)
►► FF (fastforward)
II PAUSE (pause)
● REC (recording)
The control buttons light up when you set the POWER switch to VTR.
18 EDITSEARCH button (p. 21)
19 LASER LINK button (p. 26)
20 Lens cover
21 Camera recording lamp (p. 13)
22 Infrared rays emitter (p. 18, 26)
23 Microphone
24 +SLOW SHUTTER button (p. 18)
25 NIGHTSHOT switch (p. 18)
26 Display window (p. 80)
27 Remote sensor (p. 79)
28 Tripod receptacle (base)
Make sure that the length of the tripod screw is less than 9/32 inch (6.5 mm). Otherwise, you cannot attach the tripod securely and the screw may damage your camcorder.

What is LASER LINK?
The LASER LINK system sends and receives pictures and sound between video equipment having the mark by using infrared rays.

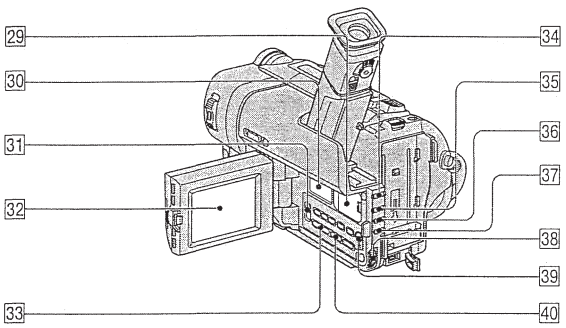

29 Lithium battery compartment (p. 62)
30 Speaker
31 START/STOP MODE switch (p. 17)
32 LCD screen (p. 14)
33 DIGITAL EFFECT button (p. 36)
34 FADER button (p. 32)
35 BACK LIGHT button (p. 18)
36 PROGRAM AE button (p. 39)
37 EXPOSURE button (p. 40)
38 SEL/PUSH EXEC dial (p. 27)
39 MENU button (p. 27, 51)
40 PICTURE EFFECT button (p. 34)

Attaching the shoulder strap
Attach the shoulder strap supplied with your camcordr to the hooks for the shoulder strap.

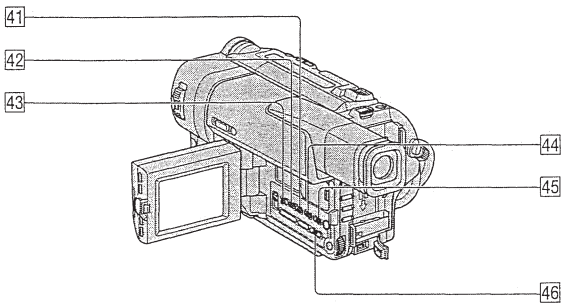

41 COUNTER RESET button (p. 13)
42 TIME button (p. 20)
43 DATE button (p. 20)
44 DISPLAY button (p. 23)
45 END SEARCH button (p. 21)
46 TITLE button (p. 42)

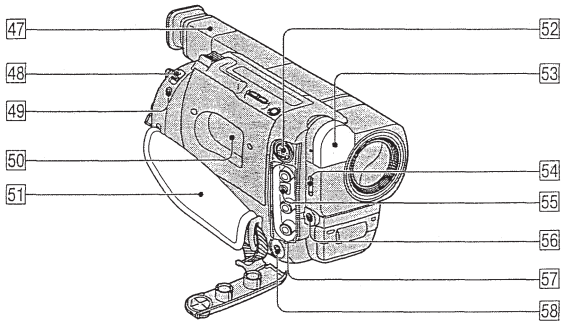

47 Viewfinder (p. 5)
48 EJECT switch (p. 12)
49 LANC ⏻ control jack
LANC stands for Local Application Control Bus System. The ⏻ control jack is used for controlling the tape transport of video equipment and other peripherals connected to the video equipment. This jack has the same function as the jack indicated as CONTROL L or REMOTE.
50 Cassette compartment (p. 12)
51 Grip strap
52 S VIDEO jack (p. 25)
53 Built-in light (p. 46)
54 LIGHT switch (p. 46)
55 RFU DC OUT (RFU adaptor DC output) jack (p. 25)
56 MIC jack (PLUG IN POWER)
Connect an external microphone (not supplied). This jack also accepts a "plug-in-power" microphone. If you connect a 2-pin microphone, supply power from DC OUT jack. In this case, WIND in the MENU settings does not function.
57 VIDEO/AUDIO jacks (p. 25)
58 🎧 (headphones) jack
When you use headphones, the speaker on your camcorder is silent.

Fastening the grip strap

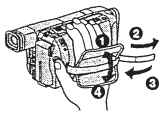

Fasten the grip strap firmly.

Remote Commander

The buttons that have the same name on the Remote Commander as on your camcorder function identically to the buttons on your camcorder.

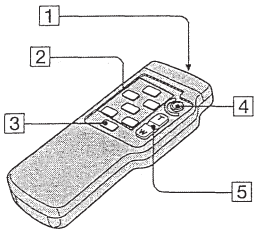

1 Transmitter
2 Video control buttons (p. 24)
3 DISPLAY button (p. 23)
4 START/STOP button (p. 13)
You use it in the standby or recording mode.
5 Power zoom button (p. 16)

To prepare the Remote Commander

Insert 2 size AA (R6) batteries by matching the + and – polarities on the batteries to the + – marks inside the battery compartment.

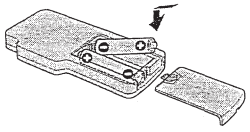

Notes on the Remote Commander
- Point the remote sensor away from strong light sources such as direct sunlight or overhead lighting. Otherwise, the Remote Commander may not function properly.
- Your camcorder works in the commander mode VTR 2. Commander modes 1, 2 and 3 are used to distinguish your camcorder from other Sony VCRs to avoid remote control misoperation. If you use another Sony VCR in the commander mode VTR 2, we recommend changing the commander mode or covering the sensor of the VCR with black paper.

Operation indicators

Viewfinder

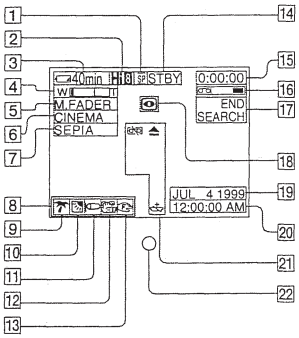

Display window

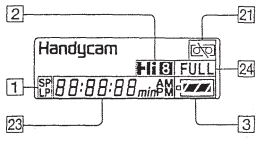

1 Recording mode indicator (p. 54)/ Mirror mode indicator (p. 14)
2 Hi8 format indicator (p. 17, 59)
3 Remaining battery time indicator (p. 17)
4 Exposure indicator (p. 40)/Zoom indicator (p. 16)
5 Fader indicator (p. 32)/Digital effect indicator (p. 36)
6 Wide mode indicator (p. 29)
7 Picture effect indicator (p. 34)
8 LCD bright indicator (p. 14)/Volume indicator (p. 22)
9 PROGRAM AE indicator (p. 38)
10 Backlight indicator (p. 18)
11 Wind indicator (p. 52)
12 SteadyShot off indicator (p. 52)
13 Manual focusing indicator (p. 41)
14 Video control mode (p. 24)
15 Tape counter (p. 17)/Self-diagnosis display function indicator (p. 66)/5SEC mode indicator (p. 17)/Photo mode indicator (p. 27)
16 Remaining tape indicator (p. 17)
17 END SEARCH indicator (p. 21)
18 NIGHTSHOT indicator (p. 18)
19 AUTO DATE indicator (p. 58)/Date indicator (p. 20, 58)
20 Time indicator (p. 20, 58)
21 Warning indicators (p. 67)
22 Recording lamp (p. 13)
23 Date or time indicator (p. 20, 58)/ Tape counter indicator (p. 17, 54)/ Self-diagnosis display function indicator (p. 66)/Remaining battery time indicator (p. 9)
24 FULL charge indicator (p. 9)

Quick Function Guide

Functions to adjust exposure (in the recording mode)

• In a dark place	NIGHTSHOT (p. 18)
• In insufficient light	Low lux mode (p. 38)
• In dark environments such as sunset, fireworks, or general night views	Sunset & moon mode (p. 38)
• Shooting backlit subjects	BACK LIGHT (p. 18)
• In spotlight, such as at the theater or a formal event	Spotlight mode (p. 38)
• In strong light or reflected light, such as at a beach in midsummer or on a ski slope	Beach & ski mode (p. 38)

Functions to give images more impact (in the recording mode)

• Smooth transition between scenes	FADER (p. 31)
• Taking a still picture	PHOTO (p. 27)
• Digital processing of images	PICTURE EFFECT (p. 34)
• Processing a scene using digital effects	DIGITAL EFFECT (p. 35)
• Creating a soft background for subjects	Soft portrait mode (p. 38)
• Superimposing a title	TITLE (p. 42)

Functions to give a natural appearance to your recordings (in the recording mode)

• Preventing deterioration of picture quality in digital zoom	D ZOOM [MENU] (p. 51)
• Focusing manually	Manual focus (p. 41)
• Reducing wind noise	WIND [MENU] (p. 51)
• Shooting distant subjects	Landscape mode (p. 38)
• Recording fast-moving subjects	Sports lesson mode (p. 38)

Functions to use in editing (in the recording mode)

• Watching the picture on a wide-screen TV	Wide mode (p. 29)
• Playing back the picture on a TV without connecting a cord	LASER LINK (p. 26)
• Recording with the date/time	Date and time (p. 20)
• Enhancing old tapes	ORC [MENU] (p. 51)

Functions to use after recording (in the playback mode)

• Playing back on monaural sound or sub sound	HiFi SOUND [MENU] (p. 51)
• Correcting jitter	TBC [MENU] (p. 51)
• Correcting color noise	DNR [MENU] (p. 51)

SECTION 2
DISASSEMBLY

The following flow chart shows the disassembly procedure.

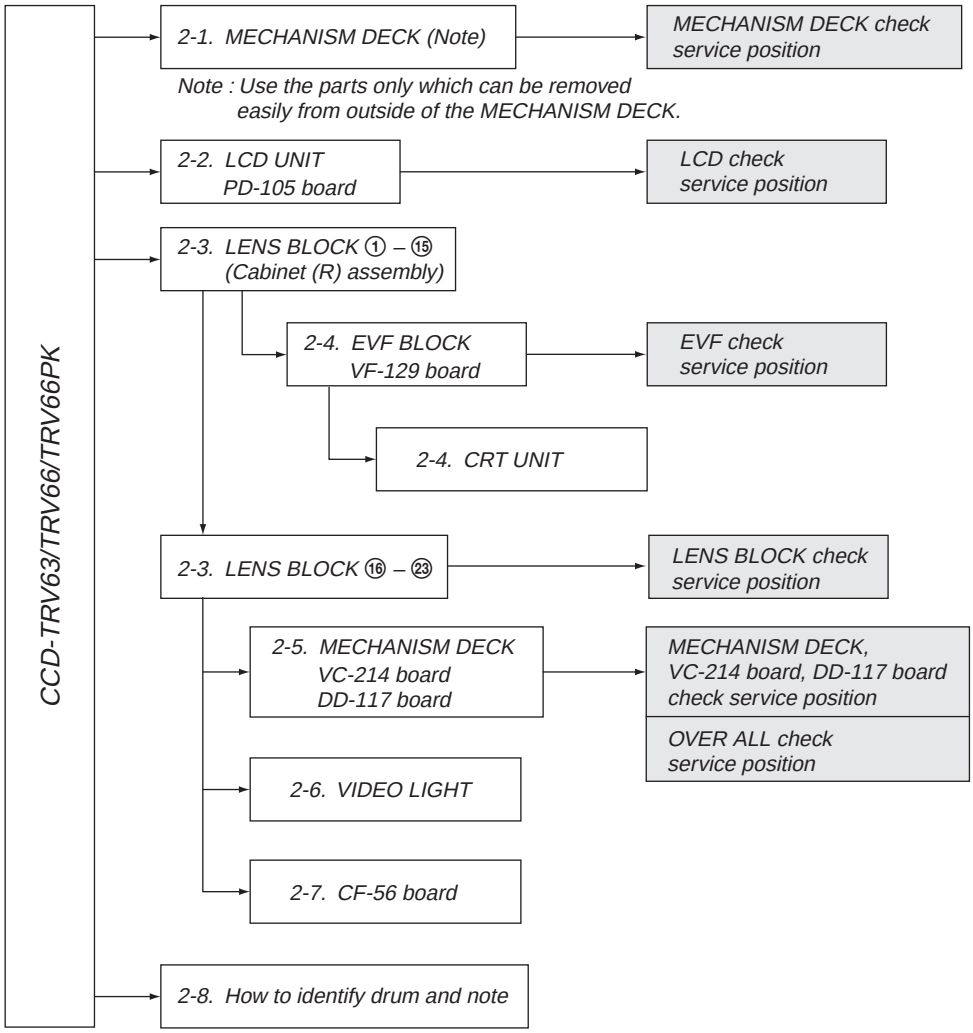
CCD-TRV63/TRV66/TRV66PK
2-1. MECHANISM DECK (Note)
MECHANISM DECK check service position
Note : Use the parts only which can be removed easily from outside of the MECHANISM DECK.
2-2. LCD UNIT PD-105 board
LCD check service position
2-3. LENS BLOCK ① – ⑮ (Cabinet (R) assembly)
2-4. EVF BLOCK VF-129 board
EVF check service position
2-4. CRT UNIT
2-3. LENS BLOCK ⑯ – ㉓
LENS BLOCK check service position
2-5. MECHANISM DECK VC-214 board DD-117 board
MECHANISM DECK, VC-214 board, DD-117 board check service position
OVER ALL check service position
2-6. VIDEO LIGHT
2-7. CF-56 board
2-8. How to identify drum and note

NOTE: Follow the disassembly procedure in the numerical order given.

2-1. MECHANISM DECK

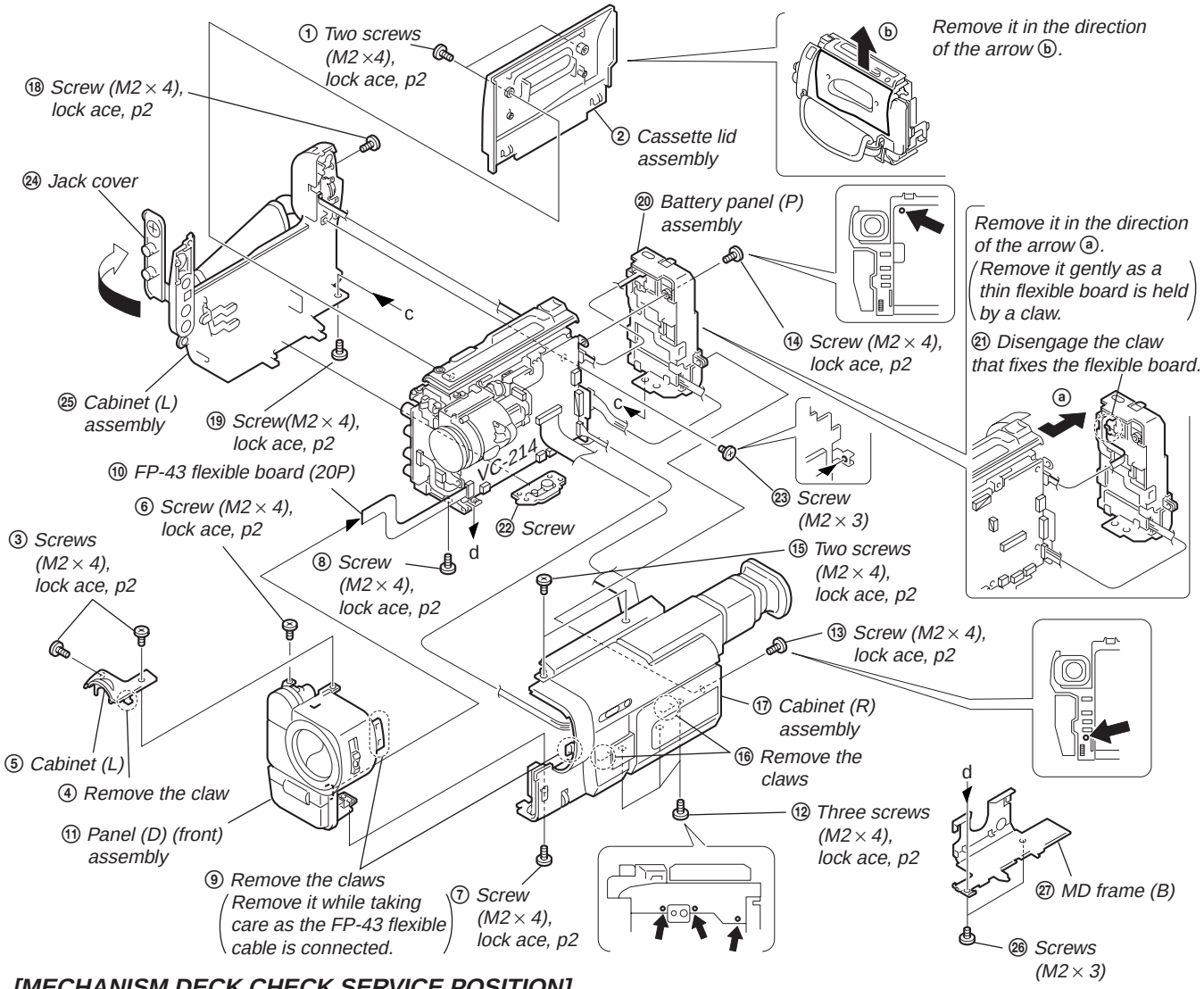
① Two screws (M2×4), lock ace, p2
② Cassette lid assembly
Remove it in the direction of the arrow ⓑ.
⑱ Screw (M2 × 4), lock ace, p2
㉔ Jack cover
⑳ Battery panel (P) assembly
Remove it in the direction of the arrow ⓐ.
(Remove it gently as a thin flexible board is held by a claw.)
⑭ Screw (M2 × 4), lock ace, p2
㉑ Disengage the claw that fixes the flexible board.
㉕ Cabinet (L) assembly
⑲ Screw(M2 × 4), lock ace, p2
⑩ FP-43 flexible board (20P)
⑥ Screw (M2 × 4), lock ace, p2
㉓ Screw (M2 × 3)
㉒ Screw
③ Screws (M2 × 4), lock ace, p2
⑧ Screw (M2 × 4), lock ace, p2
⑮ Two screws (M2 × 4), lock ace, p2
⑬ Screw (M2 × 4), lock ace, p2
⑰ Cabinet (R) assembly
⑤ Cabinet (L)
④ Remove the claw
⑯ Remove the claws
⑫ Three screws (M2 × 4), lock ace, p2
⑪ Panel (D) (front) assembly
⑨ Remove the claws
(Remove it while taking care as the FP-43 flexible cable is connected.)
⑦ Screw (M2 × 4), lock ace, p2
㉗ MD frame (B)
㉖ Screws (M2 × 3)
VC-214

[MECHANISM DECK CHECK SERVICE POSITION]

• How to move up the cassette compartment manually

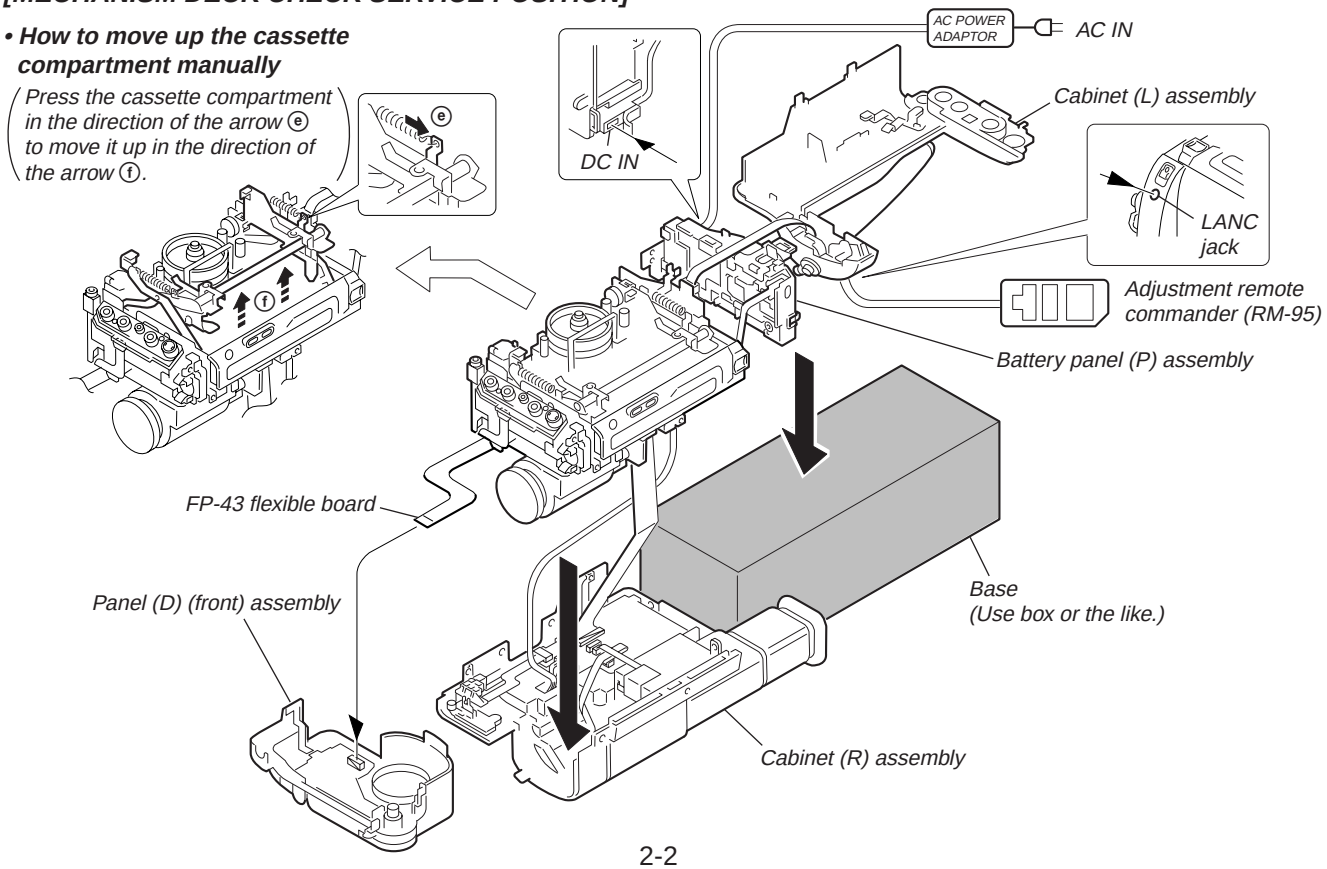
(Press the cassette compartment in the direction of the arrow ⓔ to move it up in the direction of the arrow ⓕ.)
AC POWER ADAPTOR
AC IN
DC IN
Cabinet (L) assembly
LANC jack
Adjustment remote commander (RM-95)
Battery panel (P) assembly
FP-43 flexible board
Base (Use box or the like.)
Panel (D) (front) assembly
Cabinet (R) assembly

2-2. LCD UNIT, PD-105 BOARD

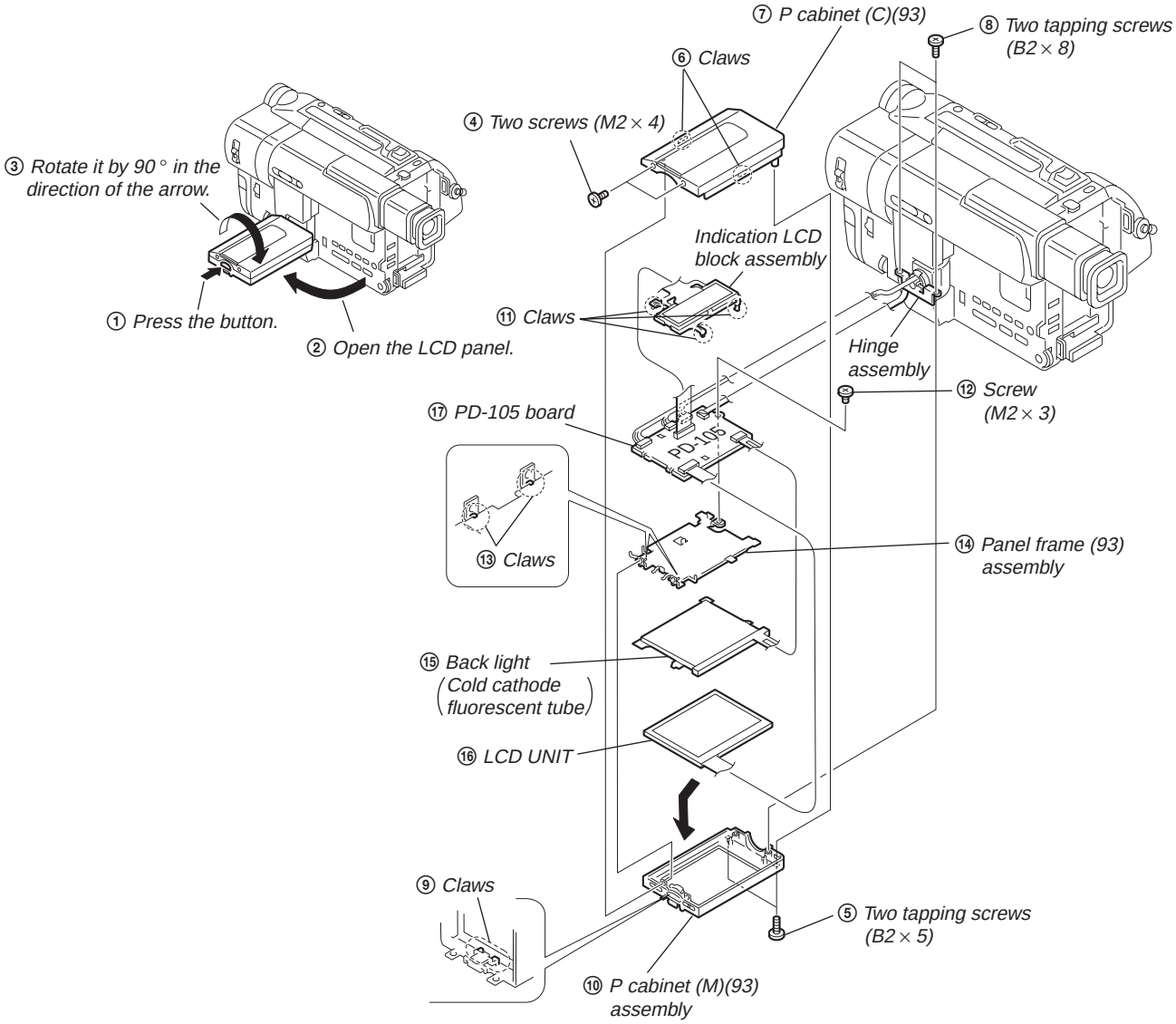
⑦ P cabinet (C)(93)
⑧ Two tapping screws (B2 × 8)
⑥ Claws
④ Two screws (M2 × 4)
③ Rotate it by 90 ° in the direction of the arrow.
Indication LCD block assembly
⑪ Claws
① Press the button.
② Open the LCD panel.
Hinge assembly
⑫ Screw (M2 × 3)
⑰ PD-105 board
PD-105
⑬ Claws
⑭ Panel frame (93) assembly
⑮ Back light (Cold cathode fluorescent tube)
⑯ LCD UNIT
⑨ Claws
⑤ Two tapping screws (B2 × 5)
⑩ P cabinet (M)(93) assembly

[LCD CHECK SERVICE POSITION]

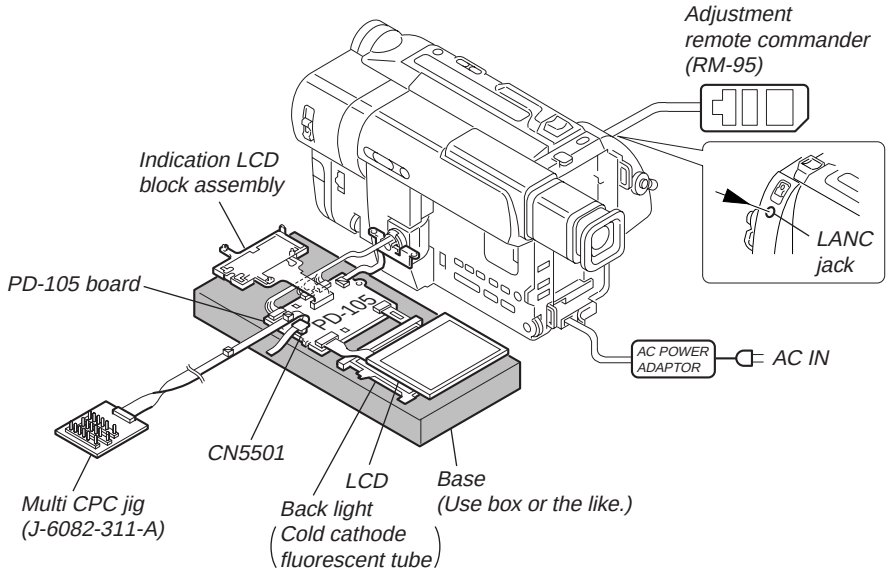

2-3. LENS BLOCK

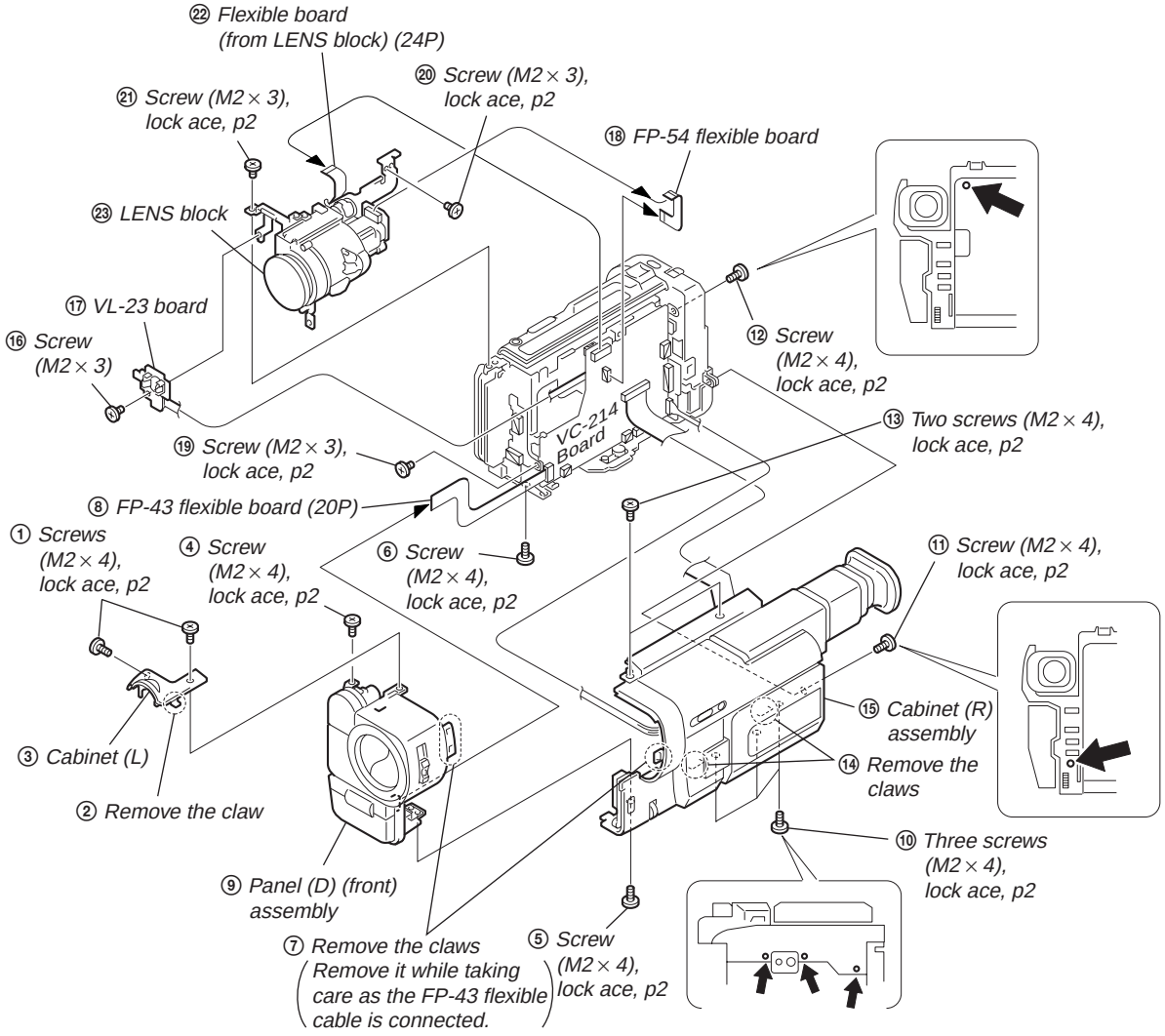
㉒ Flexible board (from LENS block) (24P)
㉑ Screw (M2 × 3), lock ace, p2
⑳ Screw (M2 × 3), lock ace, p2
⑱ FP-54 flexible board
㉓ LENS block
⑰ VL-23 board
⑯ Screw (M2 × 3)
⑫ Screw (M2 × 4), lock ace, p2
⑬ Two screws (M2 × 4), lock ace, p2
⑲ Screw (M2 × 3), lock ace, p2
VC-214 Board
⑧ FP-43 flexible board (20P)
① Screws (M2 × 4), lock ace, p2
④ Screw (M2 × 4), lock ace, p2
⑥ Screw (M2 × 4), lock ace, p2
⑪ Screw (M2 × 4), lock ace, p2
⑮ Cabinet (R) assembly
⑭ Remove the claws
③ Cabinet (L)
② Remove the claw
⑩ Three screws (M2 × 4), lock ace, p2
⑨ Panel (D) (front) assembly
⑦ Remove the claws Remove it while taking care as the FP-43 flexible cable is connected.
⑤ Screw (M2 × 4), lock ace, p2

[LENS BLOCK CHECK SERVICE POSITION]

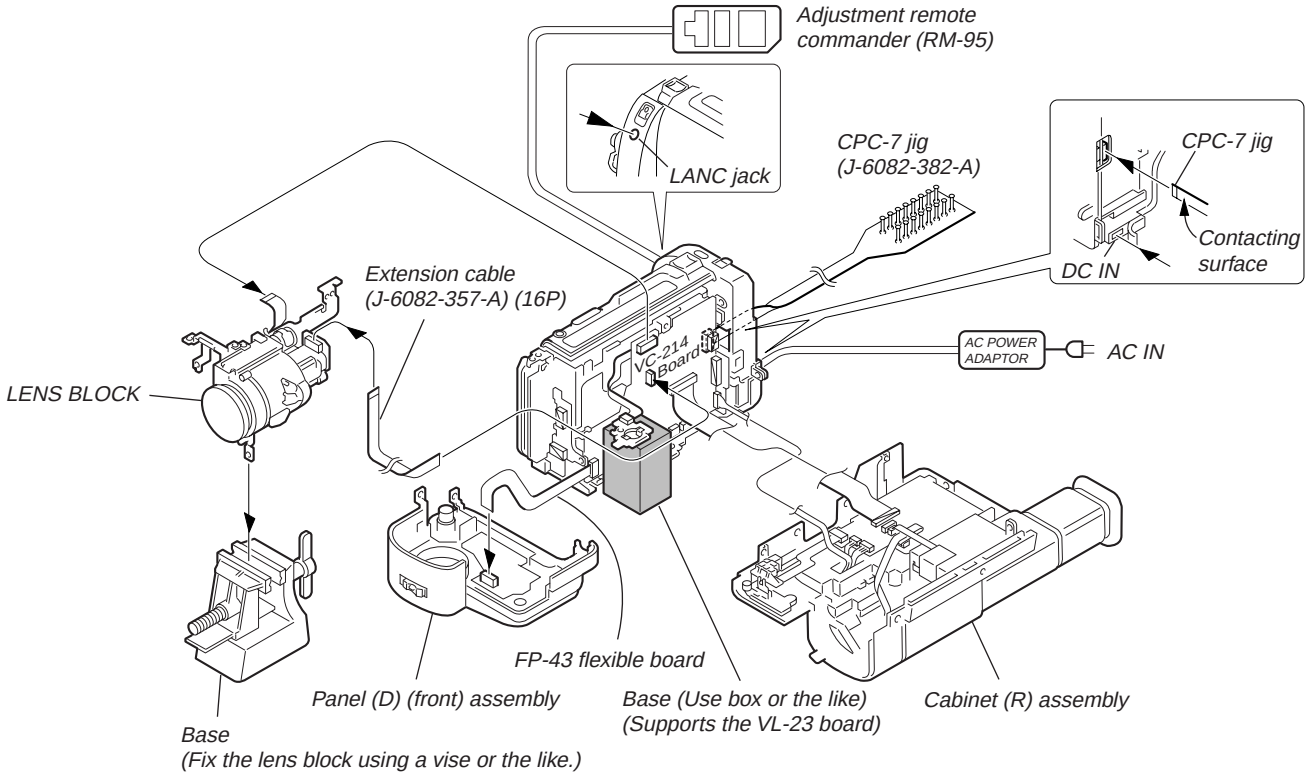

2-4. EVF BLOCK, VF-129 BOARD

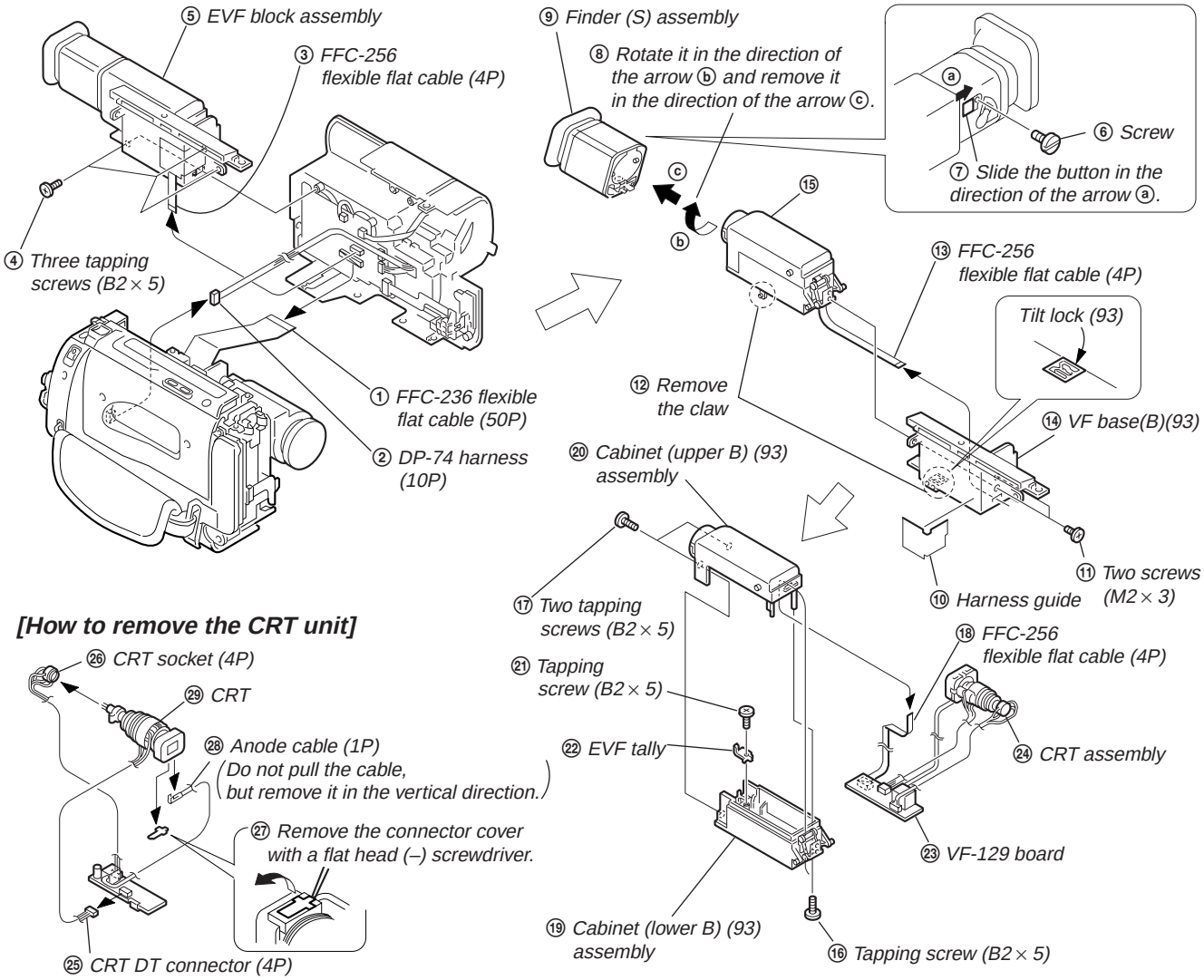
⑤ EVF block assembly
③ FFC-256 flexible flat cable (4P)
④ Three tapping screws (B2 × 5)
① FFC-236 flexible flat cable (50P)
② DP-74 harness (10P)
⑨ Finder (S) assembly
⑧ Rotate it in the direction of the arrow ⓑ and remove it in the direction of the arrow ⓒ.
ⓐ
⑥ Screw
⑦ Slide the button in the direction of the arrow ⓐ.
ⓒ
ⓑ
⑮
⑬ FFC-256 flexible flat cable (4P)
Tilt lock (93)
⑫ Remove the claw
⑭ VF base(B)(93)
⑳ Cabinet (upper B) (93) assembly
⑪ Two screws (M2 × 3)
⑩ Harness guide
⑰ Two tapping screws (B2 × 5)
⑱ FFC-256 flexible flat cable (4P)
㉑ Tapping screw (B2 × 5)
㉒ EVF tally
㉔ CRT assembly
㉓ VF-129 board
⑲ Cabinet (lower B) (93) assembly
⑯ Tapping screw (B2 × 5)

[How to remove the CRT unit]

㉖ CRT socket (4P)
㉙ CRT
㉘ Anode cable (1P)
Do not pull the cable, but remove it in the vertical direction.
㉗ Remove the connector cover with a flat head (–) screwdriver.
㉕ CRT DT connector (4P)

[EVF CHECK SERVICE POSITION]

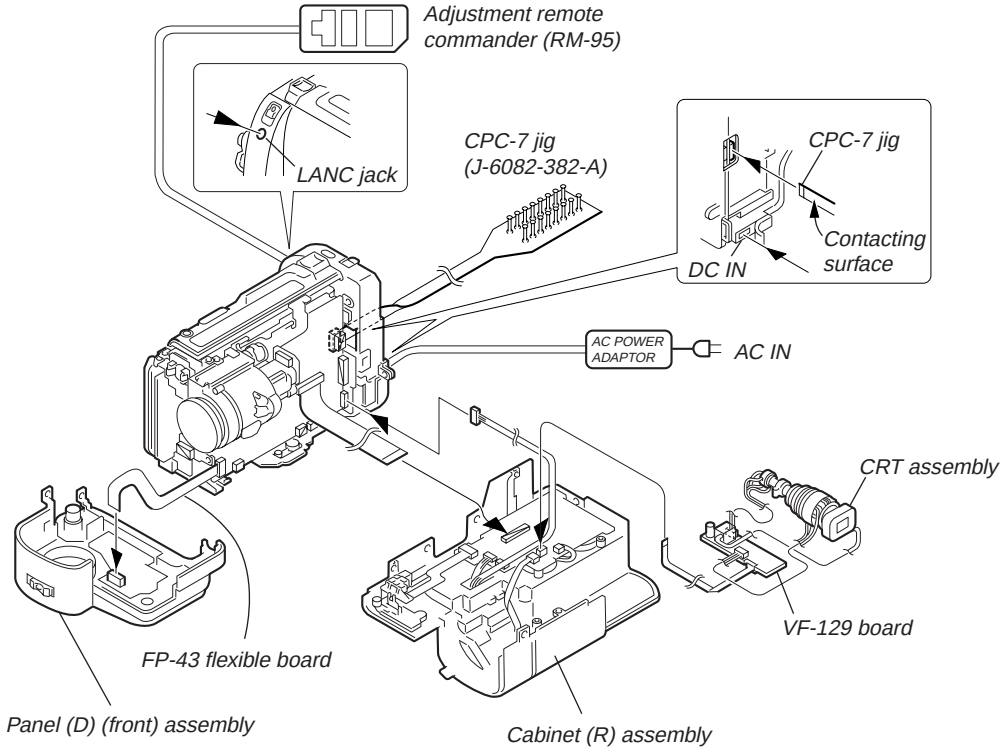

2-5. MECHANISM DECK, VC-214, DD-117 BOARDS

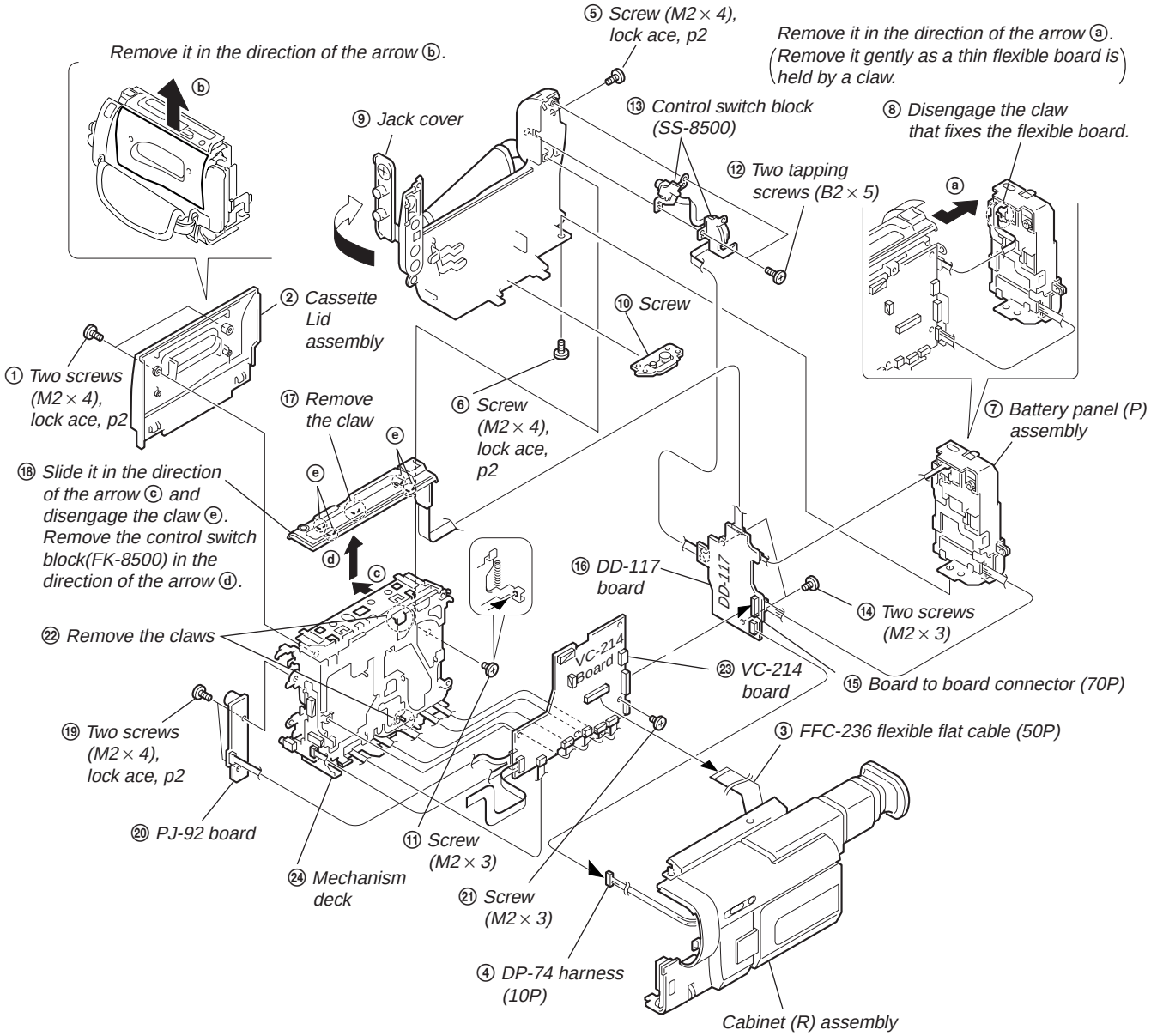
⑤ Screw (M2 × 4), lock ace, p2
Remove it in the direction of the arrow ⓑ.
Remove it in the direction of the arrow ⓐ. (Remove it gently as a thin flexible board is held by a claw.
⑨ Jack cover
⑬ Control switch block (SS-8500)
⑧ Disengage the claw that fixes the flexible board.
⑫ Two tapping screws (B2 × 5)
ⓑ
ⓐ
② Cassette Lid assembly
⑩ Screw
① Two screws (M2 × 4), lock ace, p2
⑰ Remove the claw
⑥ Screw (M2 × 4), lock ace, p2
⑦ Battery panel (P) assembly
ⓔ
⑱ Slide it in the direction of the arrow ⓒ and disengage the claw ⓔ. Remove the control switch block(FK-8500) in the direction of the arrow ⓓ.
ⓓ
ⓒ
⑯ DD-117 board
DD-117
⑭ Two screws (M2 × 3)
⑮ Board to board connector (70P)
㉒ Remove the claws
VC-214 Board
㉓ VC-214 board
⑲ Two screws (M2 × 4), lock ace, p2
③ FFC-236 flexible flat cable (50P)
⑳ PJ-92 board
⑪ Screw (M2 × 3)
㉔ Mechanism deck
㉑ Screw (M2 × 3)
④ DP-74 harness (10P)
Cabinet (R) assembly

[MECHANISM DECK, VC-214, DD-117 BOARDS CHECK SERVICE POSITION]

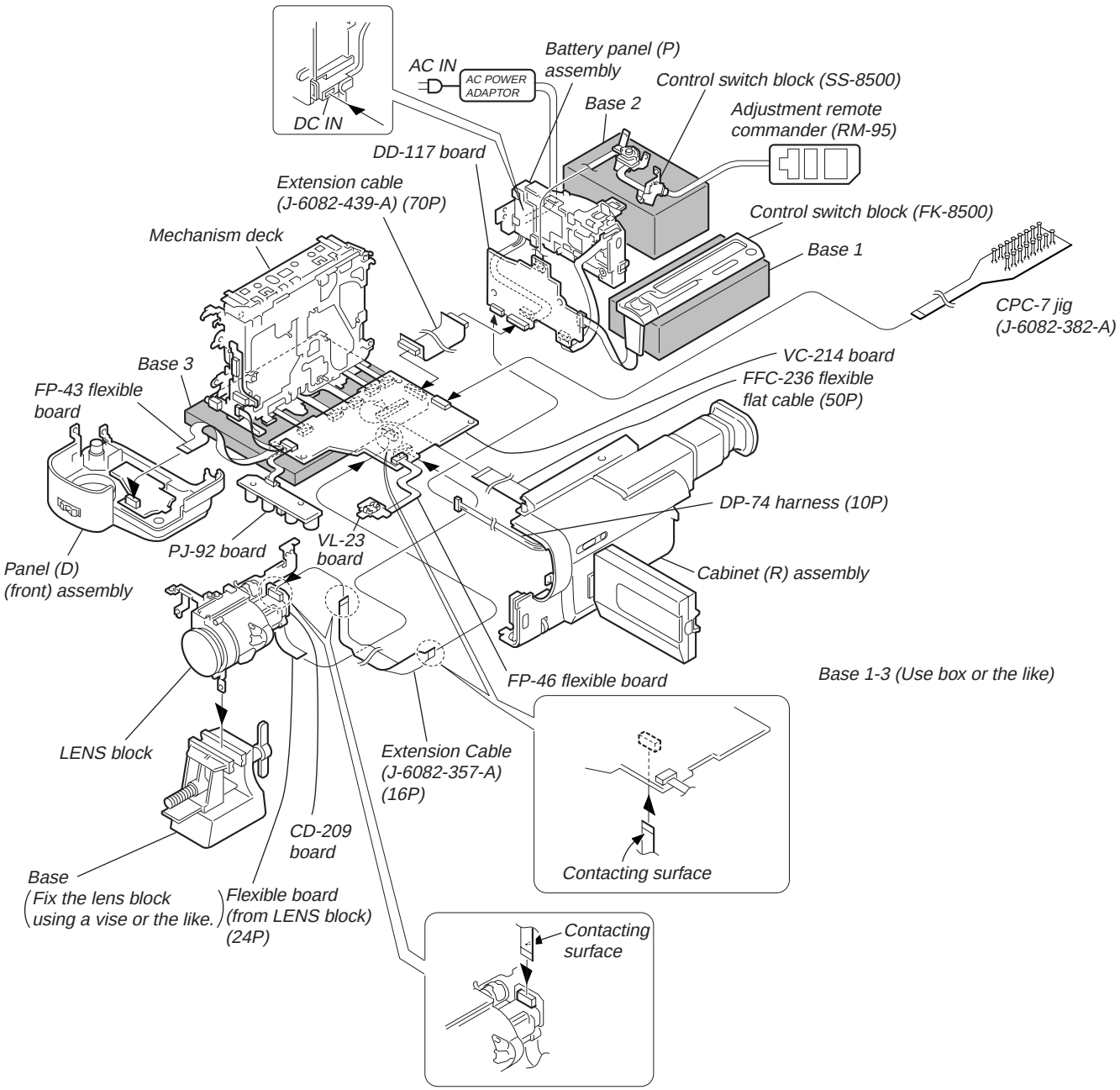

2-6. VIDEO LIGHT

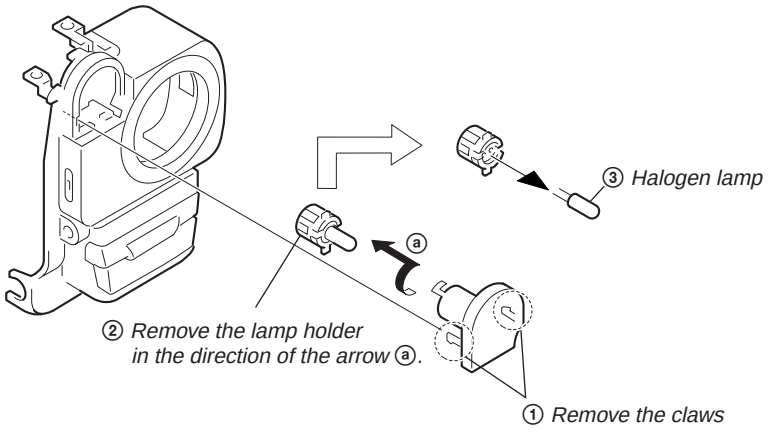

2-7. CF-56 BOARD

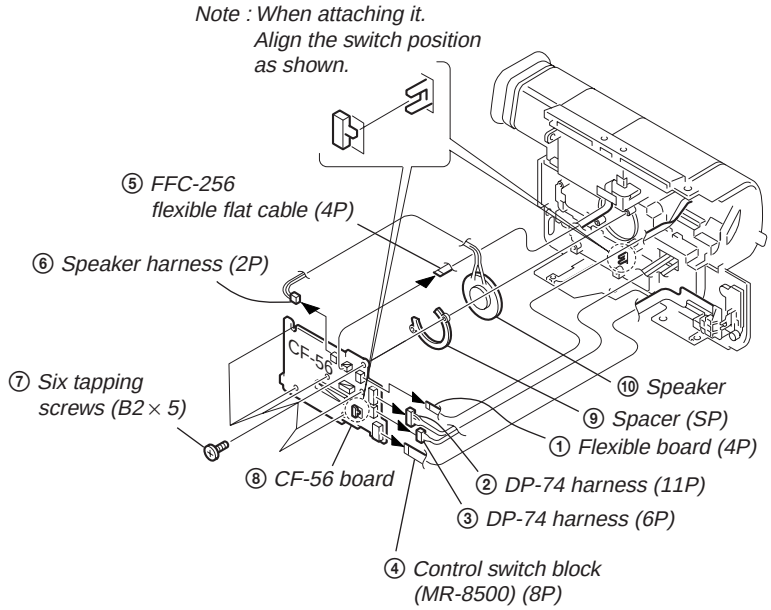
Note : When attaching it.
Align the switch position as shown.
⑤ FFC-256 flexible flat cable (4P)
⑥ Speaker harness (2P)
⑦ Six tapping screws (B2 × 5)
⑧ CF-56 board
⑩ Speaker
⑨ Spacer (SP)
① Flexible board (4P)
② DP-74 harness (11P)
③ DP-74 harness (6P)
④ Control switch block (MR-8500) (8P)

2-8. HOW TO IDENTIFY DRUM AND NOTE

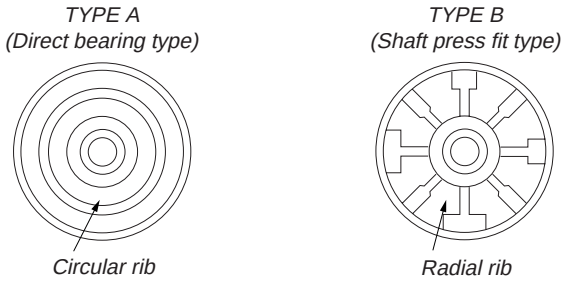

(When a drum is viewed from the top.)

Note

Ref.No. / TYPE	M901	808
A	DGH-0F0A-R ⇨	SCREW ASSY, DRUM ATTACHED X-3947-895-1
B	DGH-0E7A-R ⇨	SCREW (M1.4) 3-971-939-01

The fixing screw differs depending on the types of drums. Be sure to check the type of drum and use the screw of the same type.
Be careful that the drum of DGH-0F0A-R (Type A) only is supplied as repair part.

M901	A-7048-897-A	DRUM BLOCK ASSY (DGH-0F0A-R)	808	X-3947-895-1	SCREW ASSY, DRUM ATTACHED (TYPE A)
			808	3-971-939-01	SCREW (M1.4) (TYPE B)

2-9. CIRCUIT BOARDS LOCATION

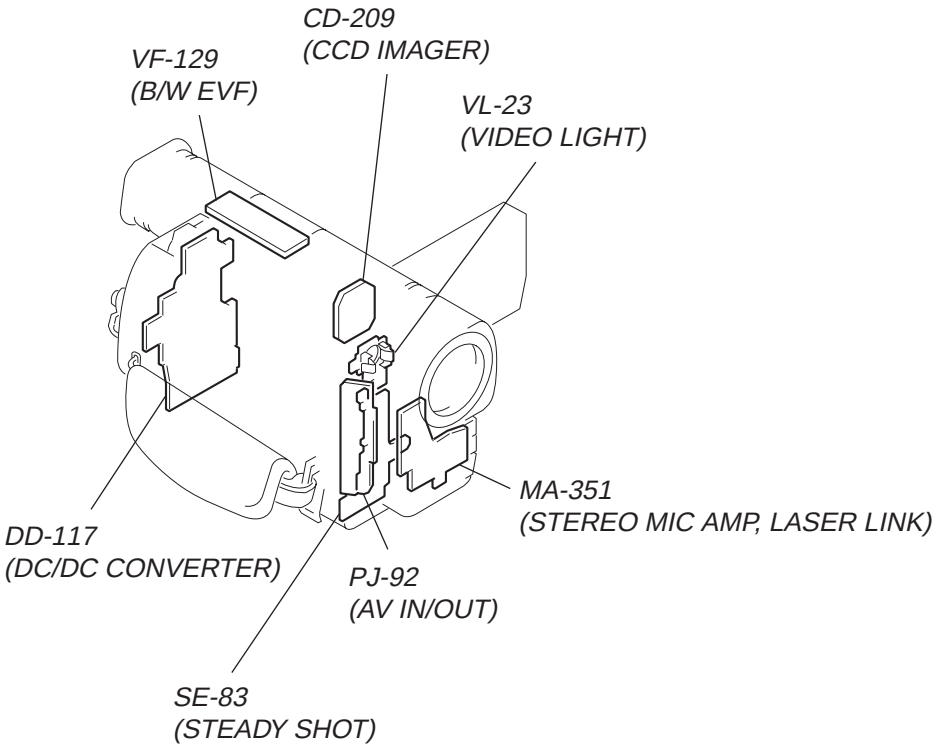

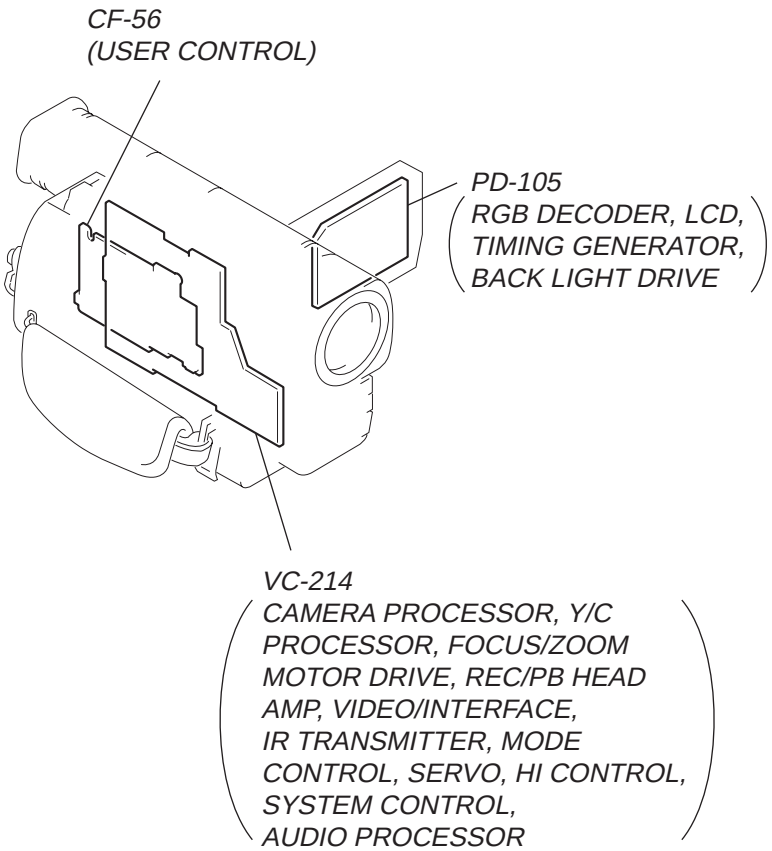

2-10. FLEXIBLE BOARDS LOCATION

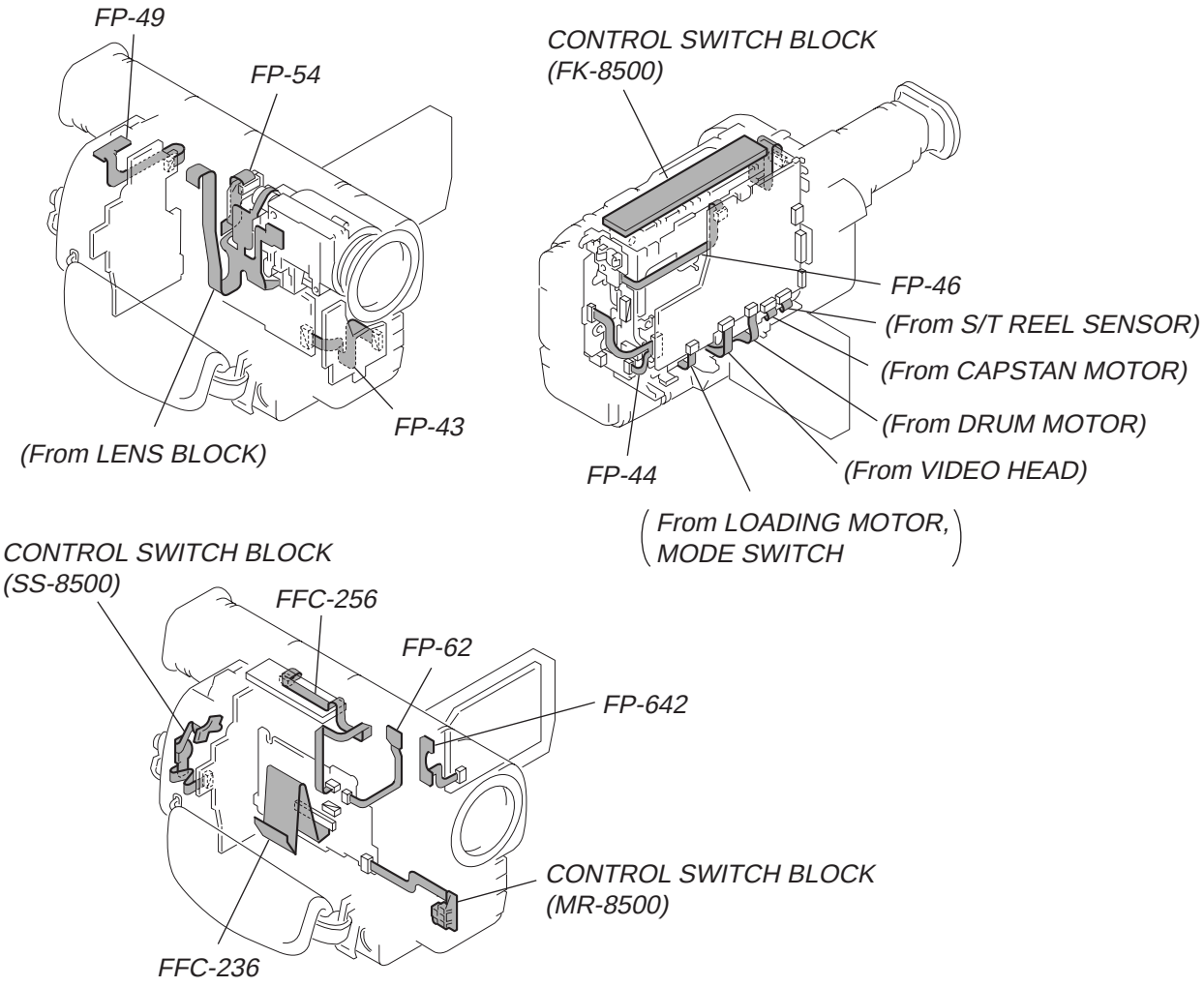

SECTION 3
BLOCK DIAGRAMS

3-1. OVERALL BLOCK DIAGRAM

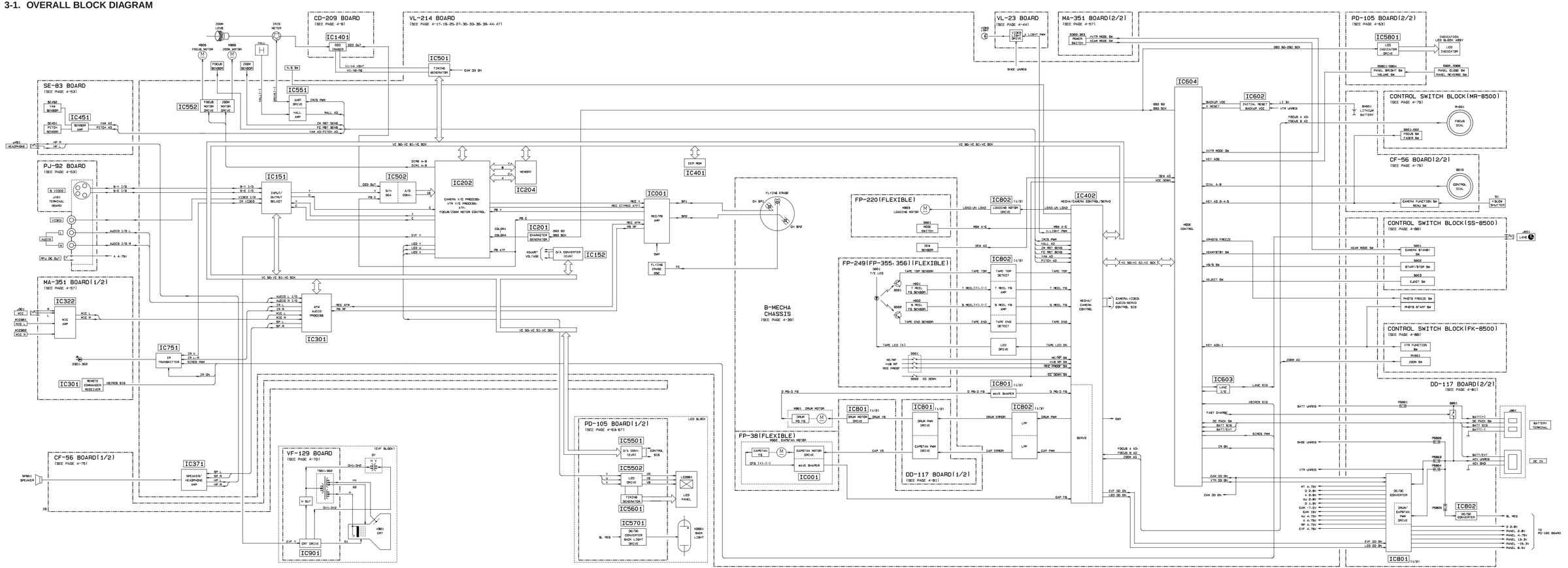

3-2. CAMERA/VIDEO BLOCK DIAGRAM

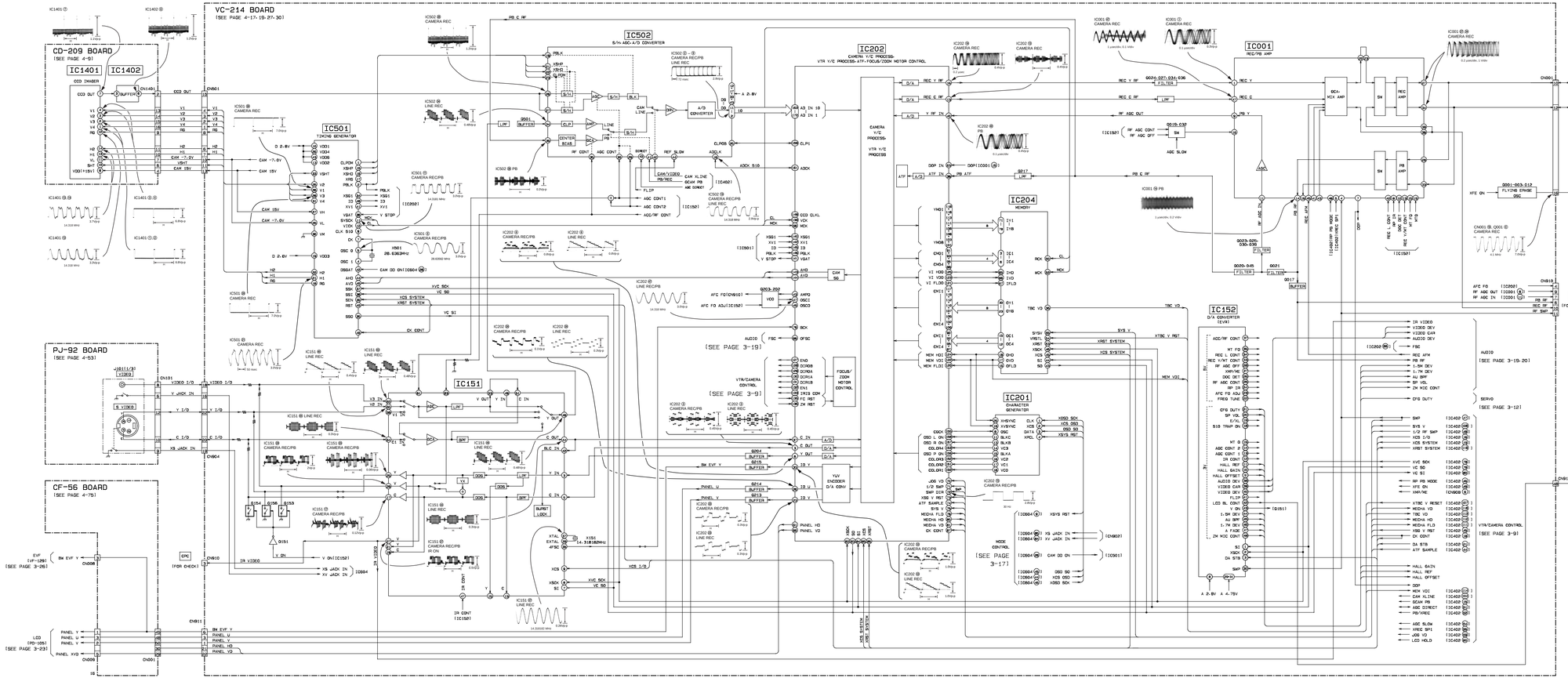

3-3. VTR/CAMERA CONTROL BLOCK DIAGRAM

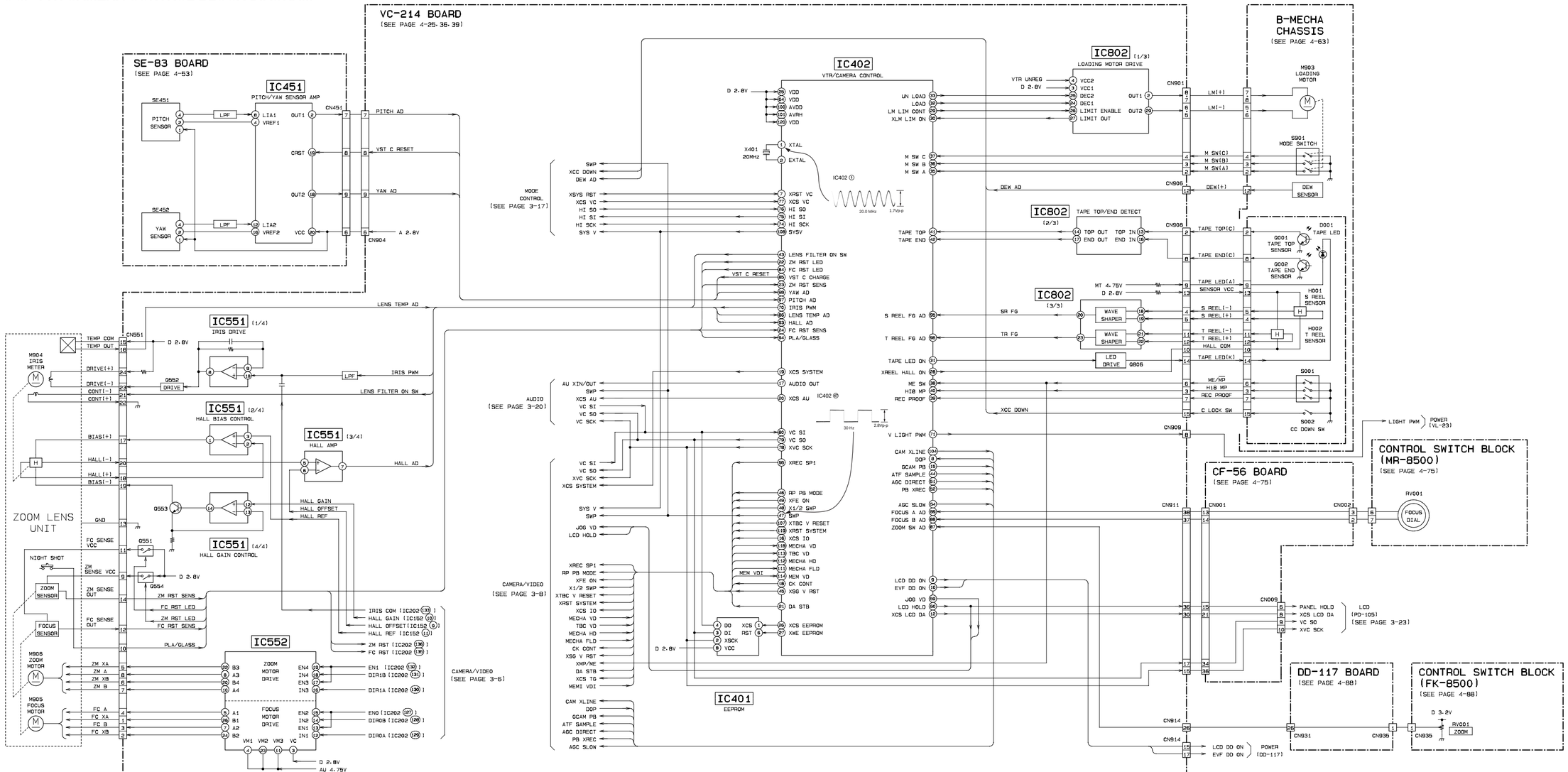

3-4. SERVO BLOCK DIAGRAM

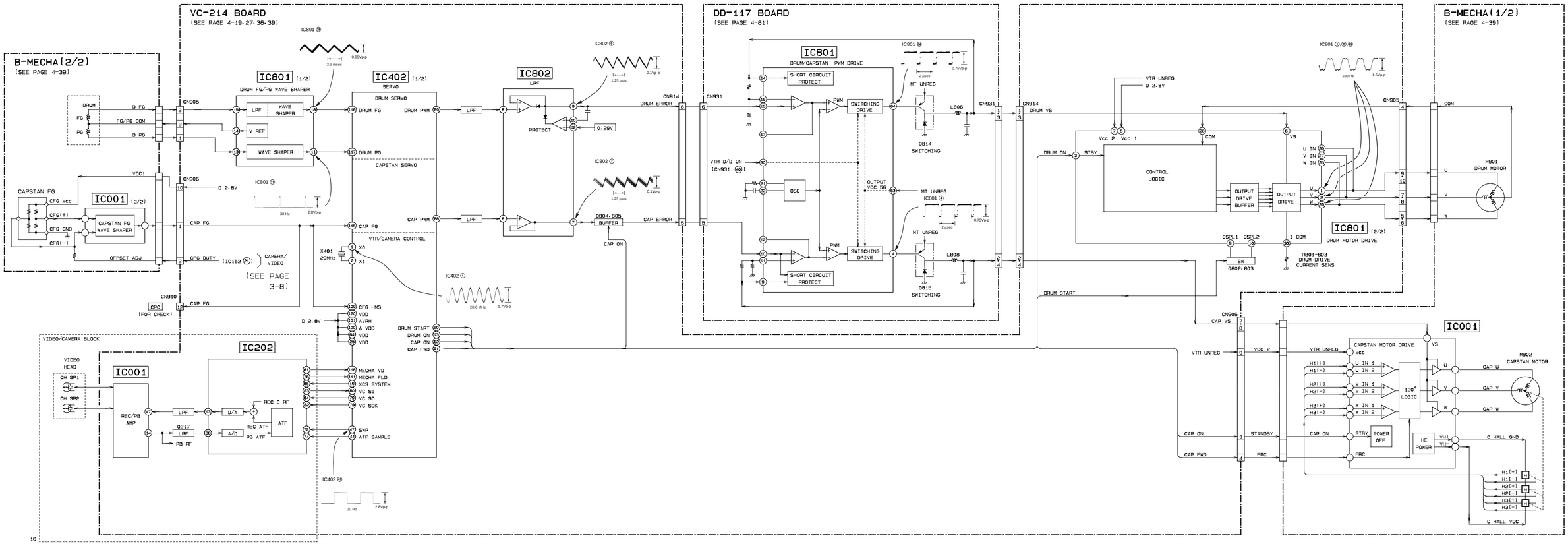

3-5. MODE CONTROL BLOCK DIAGRAM

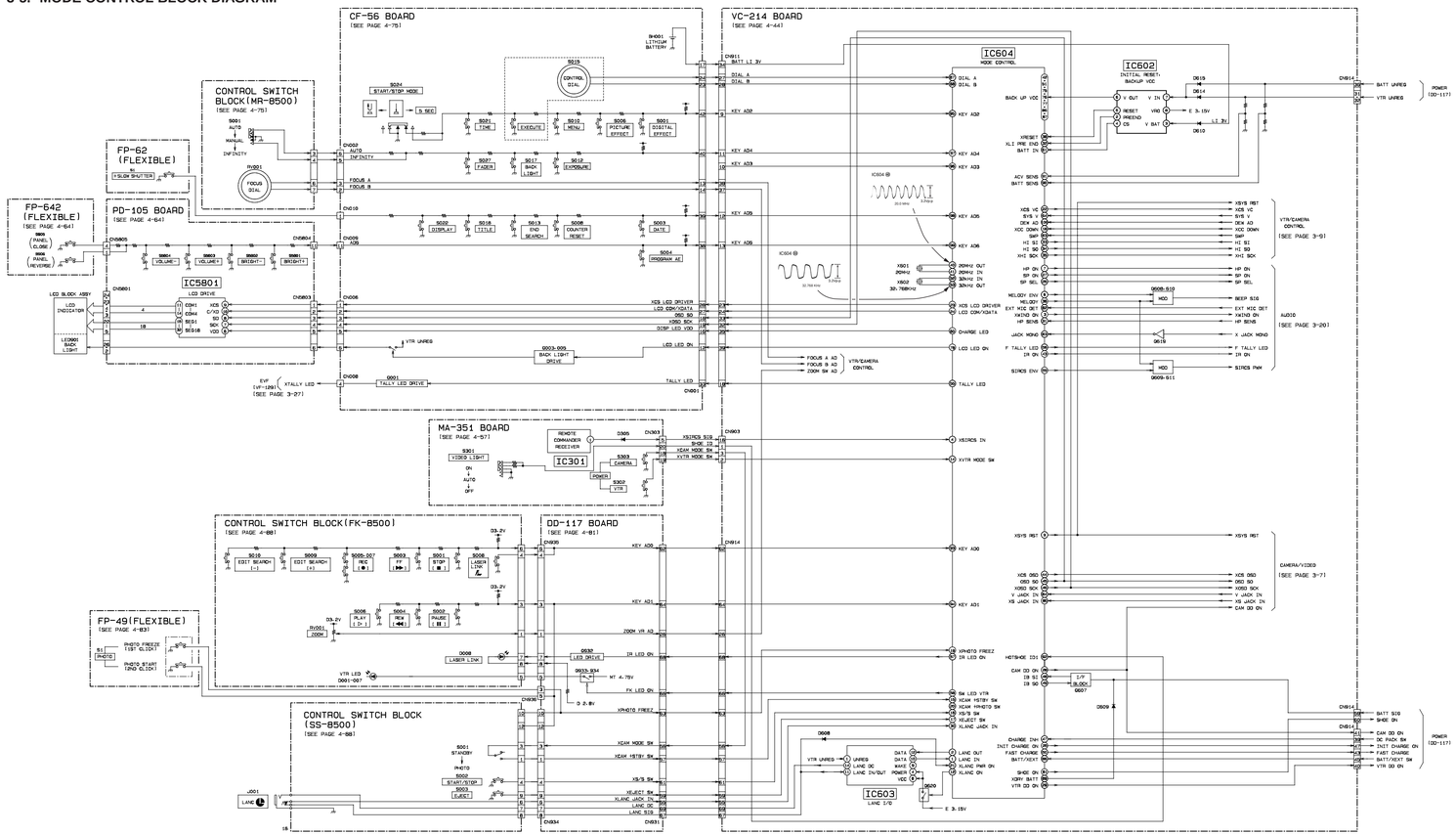

3-6. AUDIO BLOCK DIAGRAM

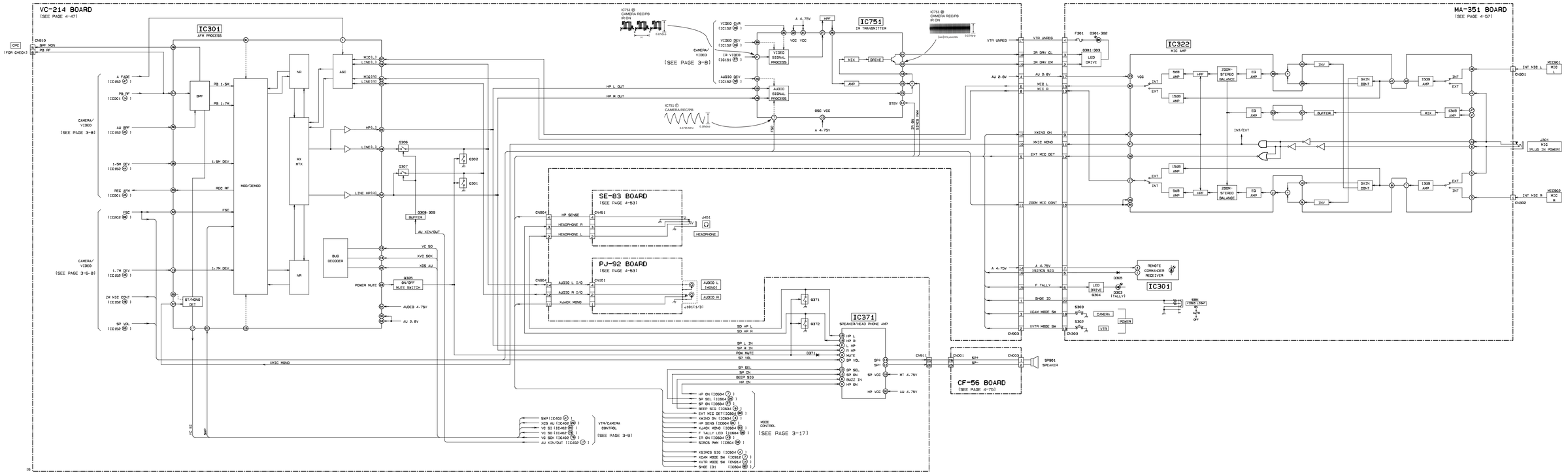

3-7. LCD BLOCK DIAGRAM

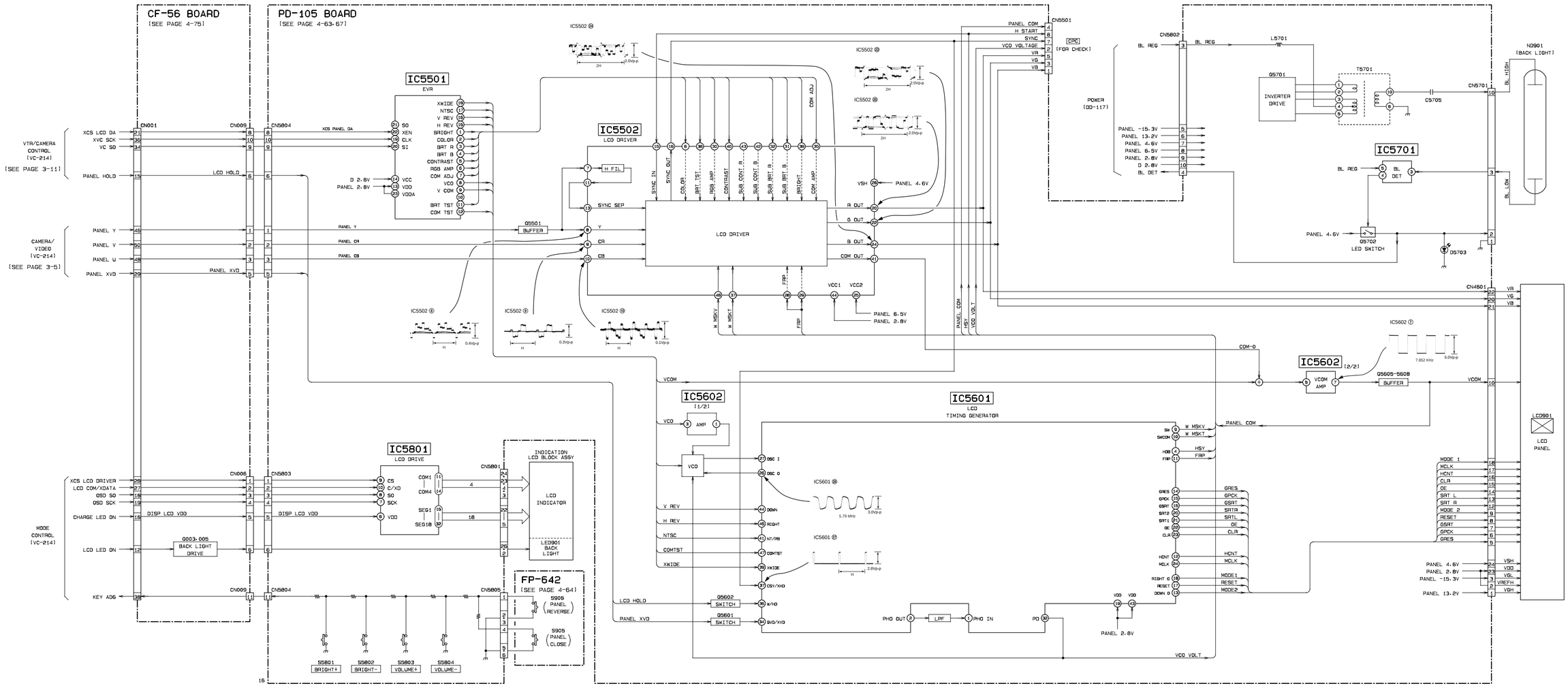

3-8. EVF BLOCK DIAGRAM

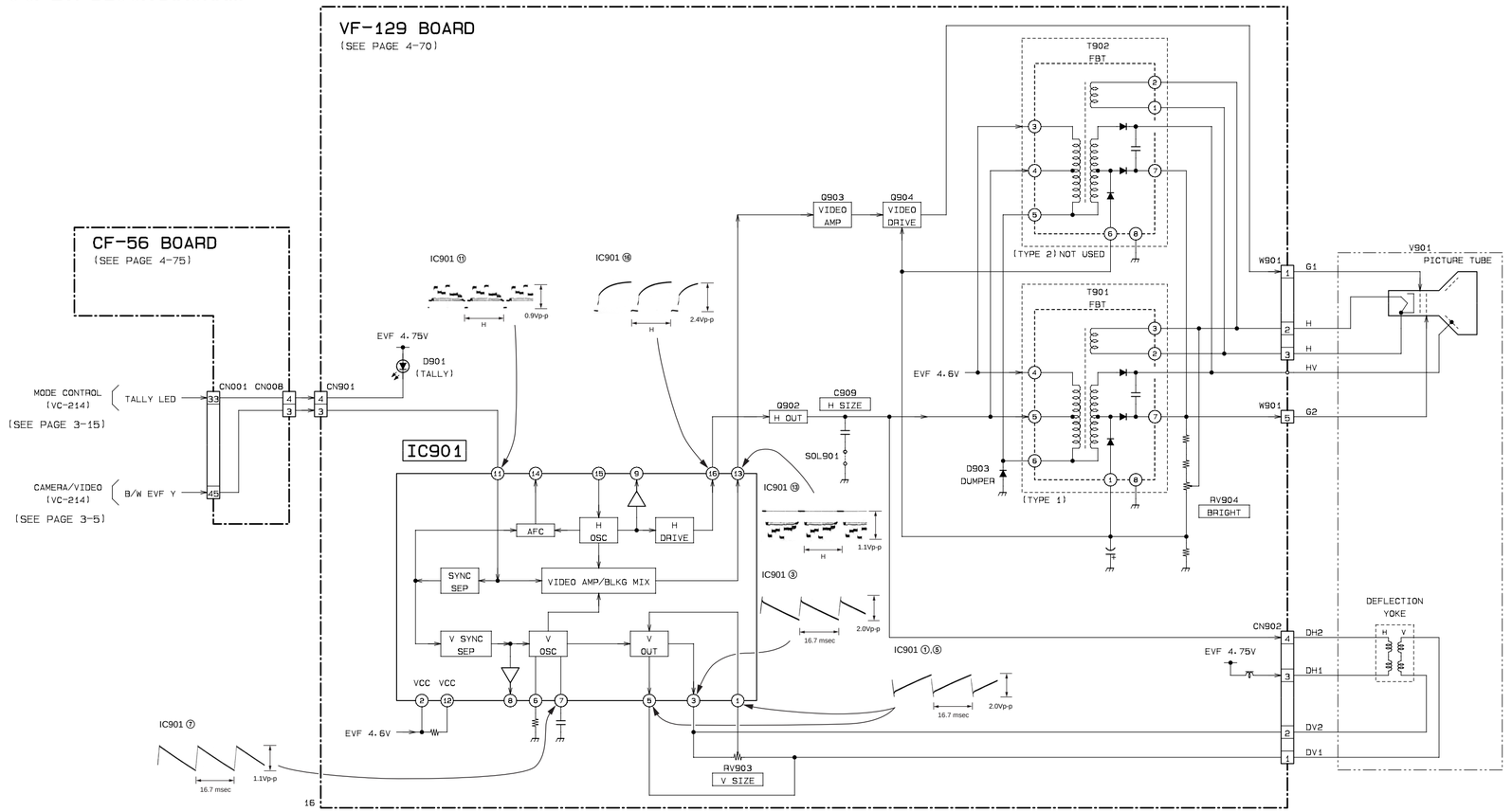

3-9. POWER BLOCK DIAGRAM

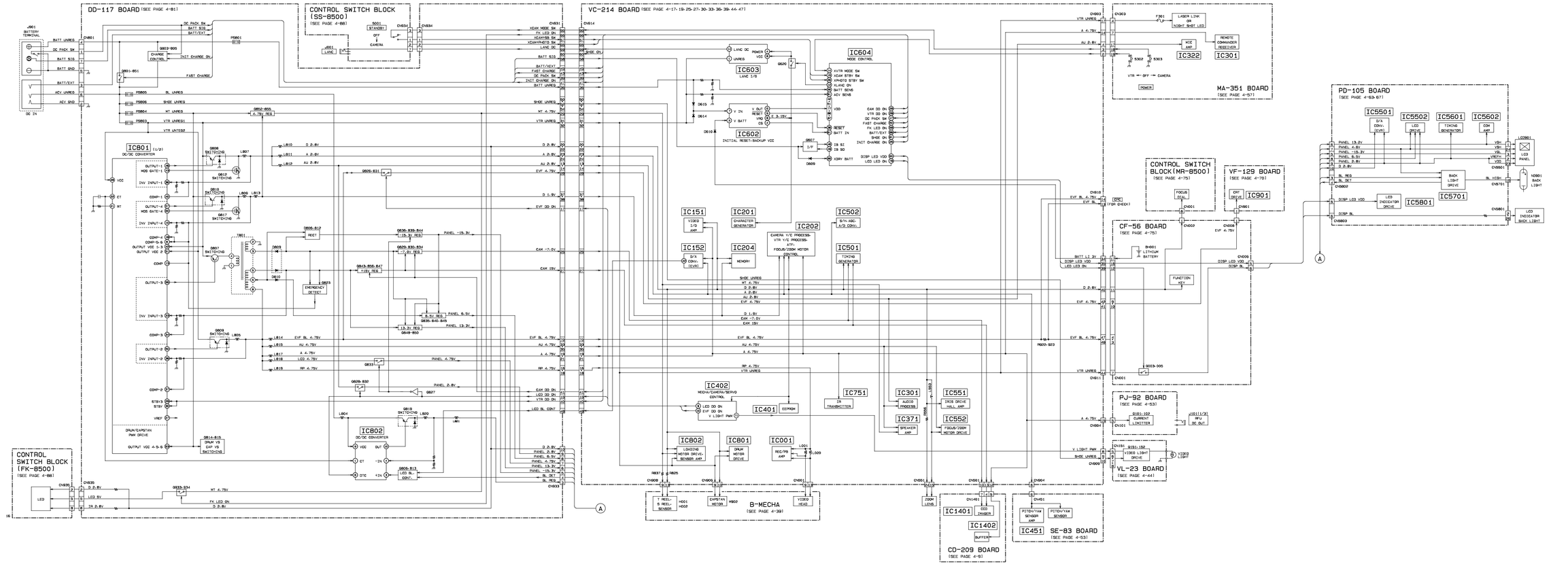

SECTION 4
PRINTED WIRING BOARDS AND SCHEMATIC DIAGRAMS

4-1. FRAME SCHEMATIC DIAGRAM-1

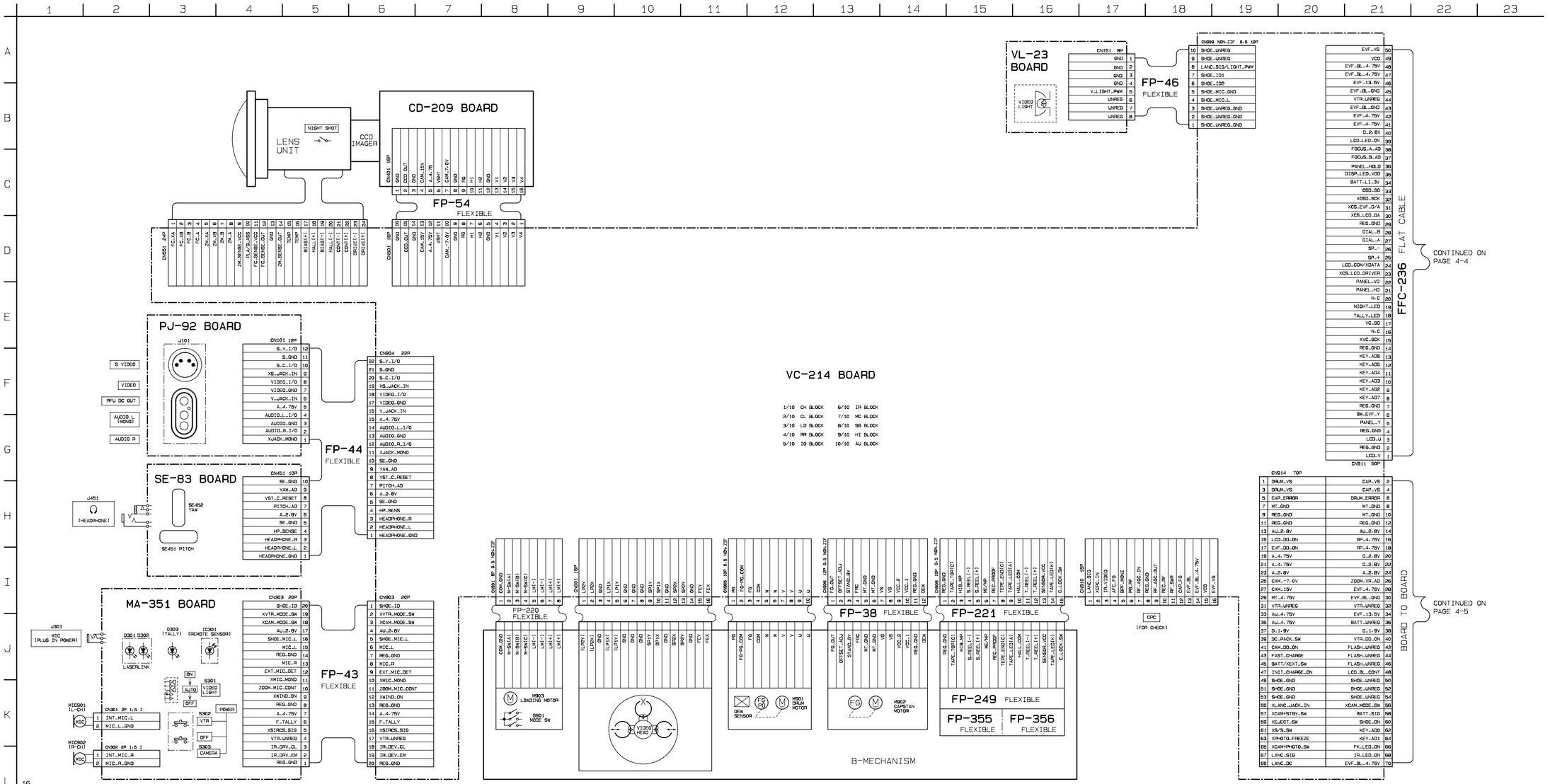

FRAME SCHEMATIC DIAGRAM (1/2)

FRAME SCHEMATIC DIAGRAM-2

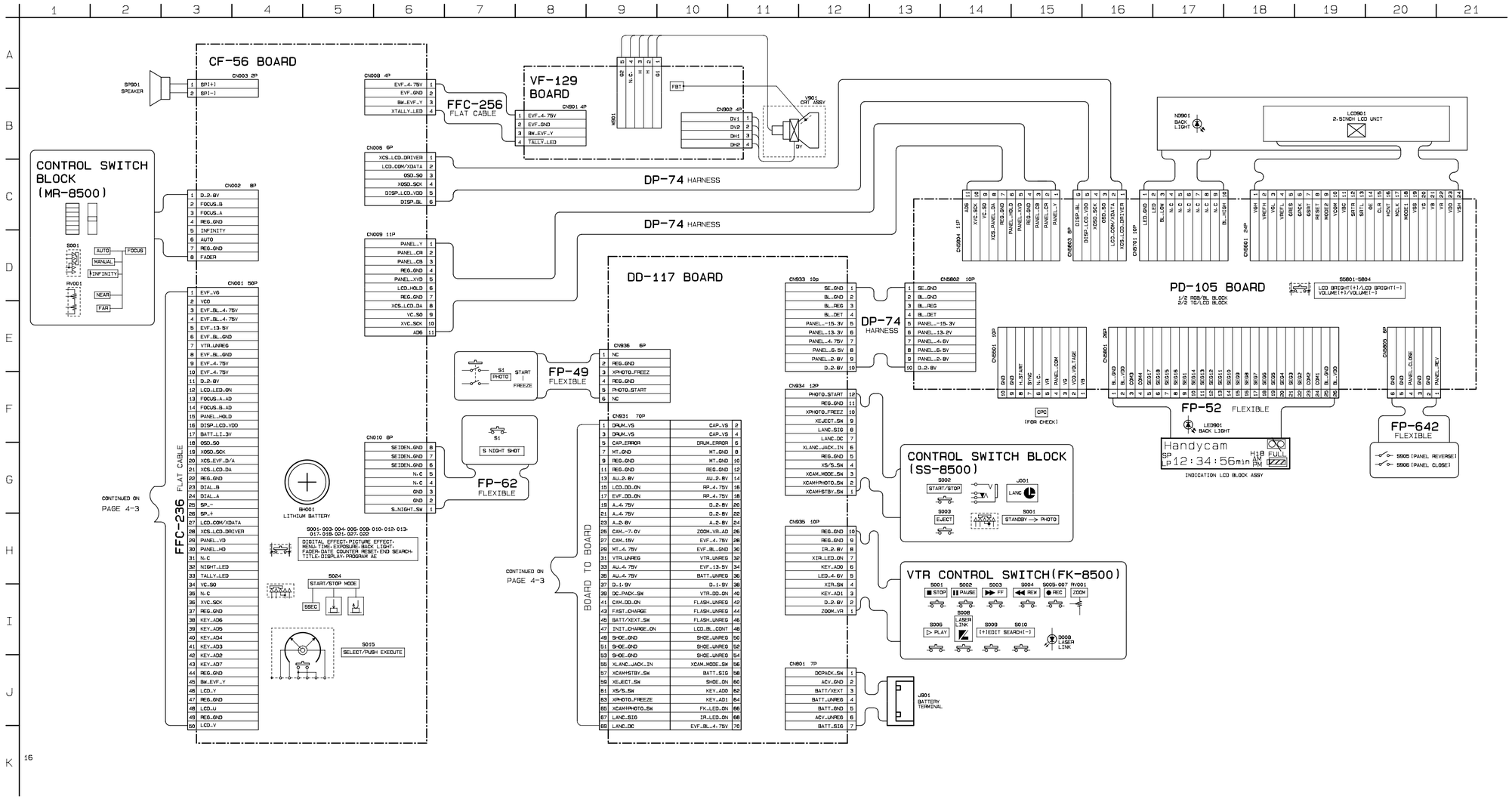

4-2. PRINTED WIRING BOARDS AND SCHEMATIC DIAGRAMS

THIS NOTE IS COMMON FOR WIRING BOARDS AND SCHEMATIC DIAGRAMS
(In addition to this, the necessary note is printed in each block)

(For printed wiring boards)
- ▒▒▒: Pattern from the side which enables seeing. (The other layers' patterns are not indicated.)
- Through hole is omitted.
- Circled numbers refer to waveforms.
- There are few cases that the part printed on diagram isn't mounted in this model.
- Chip parts.

Transistor

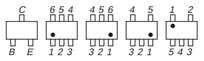

Diode

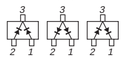

(For schematic diagrams)
- All capacitors are in µF unless otherwise noted. pF : µµF. 50V or less are not indicated except for electrolytics and tantalums.
- Chip resistors are 1/10W unless otherwise noted. kΩ=1000Ω, MΩ=1000kΩ.
- Caution when replacing chip parts. New parts must be attached after removal of chip. Be careful not to heat the minus side of tantalum capacitor, Because it is damaged by the heat.
- Some chip part will be indicated as follows.

Example	C541	L452
	22U	10UH
	TA A	2520

Kinds of capacitor
Temperature characteristics
External dimensions (mm)

- Constants of resistors, capacitors, ICs and etc with XX indicate that they are not used. In such cases, the unused circuits may be indicated.
- Parts with ★ differ according to the model/destination. Refer to the mount table for each function.
- All variable and adjustable resistors have characteristic curve B, unless otherwise noted.
- Signal name
  XEDIT → $\overline{\text{EDIT}}$ PB/XREC → PB/$\overline{\text{REC}}$
- : non flammable resistor
- : fusible resistor
- : panel designation
- : B+ Line
- : B– Line
- : IN/OUT direction of (+,–) B LINE.
- : adjustment for repair.
- Circled numbers refer to waveforms.

Note :
The components identified by mark ⚠ or dotted line with mark ⚠ are critical for safety.
Replace only with part number specified.

Note :
Les composants identifiés par une marque ⚠ sont critiques pour la sécurité.
Ne les remplacer que par une pièce portant le numéro spécifié.

(Measuring conditions voltage and waveform)
- Voltages and waveforms are measured between the measurement points and ground when camera shoots color bar chart of pattern box. They are reference values and reference waveforms. (VOM of DC 10 MΩ input impedance is used.).
- Voltage values change depending upon input impedance of VOM used.)

1. Connection

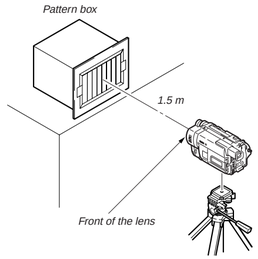

2. Adjust the distance so that the output waveform of Fig. a and the Fig. b can be obtain.

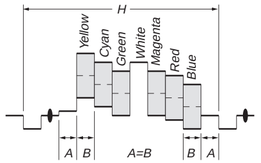

Fig. a (Video output terminal output waveform)

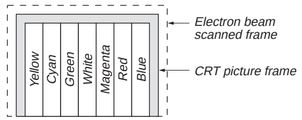

Fig.b (Picture on monitor TV)

When indicating parts by reference number, pleas include the board name.

CD-209 (CCD IMAGER) PRINTED WIRING BOARD
— Ref. No. CD-209 Board; 10,000 Series —

CD-209 BOARD

C1401	A-2
C1405	A-1
C1406	A-1
C1407	B-2
C1408	B-2
C1409	B-1
C1410	B-1
C1411	B-2
C1412	B-1
CN1401	A-3
IC1401	A-3
IC1402	B-2
L1401	A-2
L1402	B-1
R1401	A-1
R1405	A-1
R1406	B-2
R1407	B-2
R1408	B-2
R1409	B-1

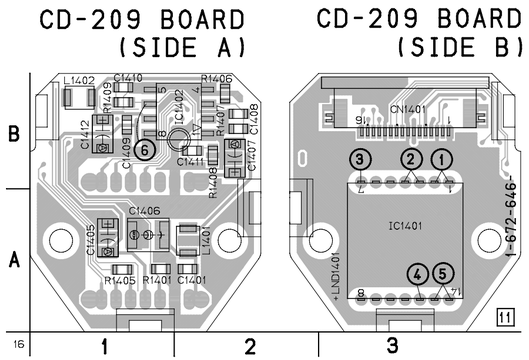

For printed wiring boards
- This board is six-layer print board. However, the patterns of layers two to five have not been included in the diagram.

There are few cases that the part printed on this diagram isn't mounted in this model.

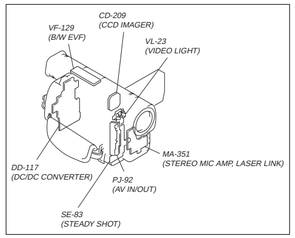

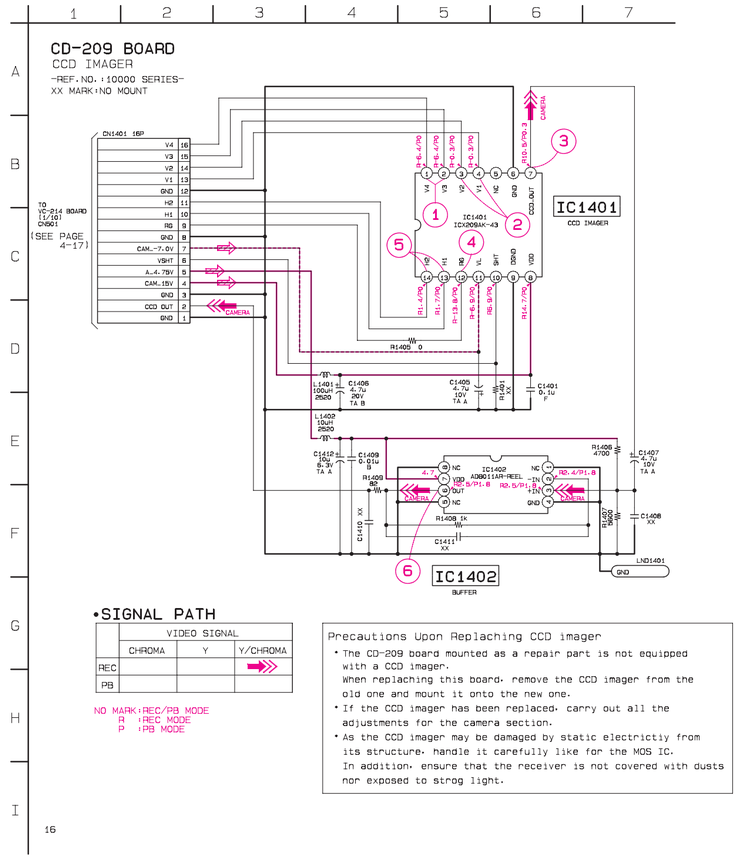
CD-209 BOARD
CCD IMAGER
-REF.NO.:10000 SERIES-
XX MARK:NO MOUNT
CN1401 16P
TO V-214 BOARD (1)/101 CN501
(SEE PAGE 4-17)
IC1401
CCD IMAGER
IC1402
BUFFER
CAMERA
L1401 100uH 2520
L1402 10uH 2520
C1406 4.7u 20V TA B
C1400 4.7u 10V TA A
C1401 0.1u F
C1412 10u 6.3V TA A
C1409 0.01u B
C1410 XX
C1411 XX
C1408 XX
C1407 4.7u 10V TA A
R1409 0
R1408 4700
R1407 1000
R1408 1K
LND1401
GND
•SIGNAL PATH
VIDEO SIGNAL
CHROMA
Y
Y/CHROMA
REC
PB
NO MARK:REC/PB MODE
R :REC MODE
P :PB MODE
Precautions Upon Replaching CCD imager
• The CD-209 board mounted as a repair part is not equipped with a CCD imager. When replaching this board, remove the CCD imager from the old one and mount it onto the new one.
• If the CCD imager has been replaced, carry out all the adjustments for the camera section.
• As the CCD imager may be damaged by static electricity from its structure, handle it carefully like for the MOS IC. In addition, ensure that the receiver is not covered with dusts nor exposed to strog light.

CD-209 BOARD
CAMERA REC

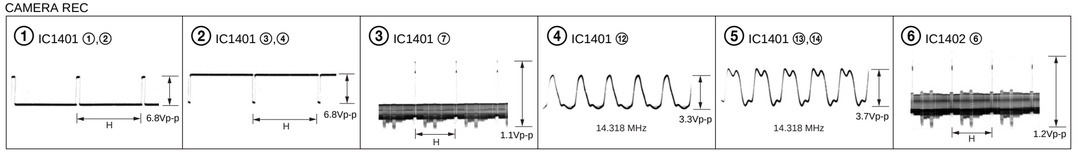

VC-214 BOARD (SIDE A)

C006	A-4	C324	A-1	C801	A-7	Q033	C-4	R229	E-6	R577	E-4
C008	A-5	C325	B-1	C802	A-7	Q034	C-4	R230	E-6	R579	F-4
C009	B-5	C326	B-2	C803	A-6	Q036	C-5	R231	E-7	R583	G-5
C011	B-5	C327	A-1	C804	B-6	Q040	C-6	R232	E-6	R605	G-9
C021	B-5	C328	B-2	C805	B-6	Q043	C-4	R233	E-6	R606	G-7
C022	B-5	C329	A-2	C806	B-7	Q044	C-4	R234	E-6	R610	G-8
C027	B-4	C330	B-2	C807	B-6	Q204	D-6	R235	E-6	R611	G-8
C028	B-4	C331	B-2	C808	B-7	Q205	E-8	R236	E-6	R613	G-9
C030	B-5	C332	A-2	C809	B-7	Q208	D-6	R237	E-6	R614	G-7
C031	B-4	C333	A-2	C810	B-7	Q213	D-6	R238	E-6	R622	F-9
C034	B-5	C334	B-2	C811	B-6	Q214	D-6	R239	E-7	R628	F-9
C035	C-4	C335	A-2	C812	B-7	Q215	E-7	R241	E-6	R645	E-8
C036	B-4	C336	B-2	C813	B-6	Q216	E-7	R242	E-7	R650	G-7
C038	B-3	C337	A-3	C814	C-6	Q217	E-8	R243	E-8	R664	E-8
C039	B-4	C338	B-3	C815	B-7	Q310	A-2	R251	F-7	R666	E-9
C040	B-4	C339	A-3	C816	B-6	Q501	D-4	R252	F-7	R667	E-9
C041	B-4	C340	B-3	C817	C-6	Q551	G-5	R253	G-7	R668	E-9
C045	B-5	C341	A-3	C818	B-6	Q552	F-4	R255	E-8	R669	E-9
C046	C-4	C342	B-3	C819	B-6	Q553	E-5	R258	E-6	R670	E-8
C047	B-5	C343	B-1	C820	B-7	Q554	G-5	R259	E-7	R671	E-8
C048	B-4	C344	B-3	C821	B-6	Q608	G-9	R260	D-6	R672	E-8
C052	B-5	C345	A-3	C822	B-7	Q609	G-8	R261	E-7	R673	E-8
C053	B-5	C346	A-3	C823	A-8	Q610	G-8	R262	E-7	R681	F-9
C056	B-4	C347	B-3	C836	A-9	Q611	G-8	R308	B-1	R682	F-9
C058	B-4	C389	A-3	C838	A-8	Q801	C-6	R310	B-1	R683	G-9
C062	C-5	C402	A-7	C839	A-9	Q802	B-6	R313	A-1	R684	G-9
C065	C-6	C411	B-9	C840	A-9	Q803	C-7	R317	A-1	R685	G-9
C069	C-6	C412	B-8			Q806	A-9	R318	B-2	R690	E-8
C071	C-5	C415	B-8	CN001	A-4			R319	A-3	R691	E-8
C073	B-3	C416	B-8	CN501	E-5	R004	A-5	R320	B-2	R693	G-9
C075	C-4	C417	C-7	CN551	G-5	R014	B-5	R321	A-1	R695	G-9
C078	C-4	C418	A-7	CN901	A-2	R035	B-5	R322	A-3	R696	G-9
C079	C-4	C419	B-8	CN902	D-7	R038	B-4	R323	B-3	R697	G-8
C081	C-5	C502	E-5	CN903	A-1	R039	B-4	R325	B-3	R698	E-8
C082	C-5	C512	D-4	CN905	A-6	R043	C-4	R331	A-3	R801	B-6
C084	C-5	C513	D-5	CN906	A-7	R044	B-4	R343	A-3	R802	B-6
C085	C-6	C516	E-4	CN907	D-9	R045	B-4	R350	A-3	R803	B-6
C088	C-5	C517	D-4	CN908	A-8	R046	C-4	R405	A-7	R804	A-6
C089	C-4	C519	D-4	CN911	C-7	R056	B-4	R406	A-7	R805	A-6
C156	C-2	C520	D-4	CN914	C-9	R058	B-4	R407	A-8	R806	B-6
C157	C-2	C521	D-4			R063	C-5	R409	A-8	R807	A-6
C158	C-2	C522	D-4	D002	C-4	R071	D-4	R410	A-8	R808	B-6
C160	C-2	C523	D-4	D551	G-4	R072	B-4	R416	A-8	R809	B-6
C161	C-2	C524	D-4	D610	D-6	R073	B-4	R420	B-8	R813	A-8
C166	C-2	C525	D-4	D910	D-3	R074	B-4	R421	B-8	R814	A-7
C171	C-1	C526	D-4	D911	E-3	R075	C-3	R432	B-9	R815	A-7
C185	C-2	C527	D-4			R081	C-4	R433	B-9	R823	A-8
C187	C-2	C528	D-5	FB002	A-4	R082	C-4	R434	B-8	R825	A-8
C188	B-1	C529	D-5	FB004	A-5	R085	C-4	R435	B-9	R836	A-9
C189	B-1	C530	D-5	FB201	E-8	R086	D-4	R436	B-8	R837	A-9
C201	F-7	C532	D-4	FB203	F-5	R092	C-4	R437	A-8	R917	C-8
C204	E-8	C533	D-4	FB206	E-7	R093	C-5	R440	B-9	R918	C-8
C206	E-7	C534	E-5	FB506	E-5	R096	C-4	R441	C-8	R919	C-8
C209	D-5	C535	D-4	FB602	E-8	R098	C-4	R513	D-4	R920	C-8
C210	D-6	C551	G-4			R099	C-4	R514	D-4	R932	D-8
C217	E-7	C552	F-4	IC001	B-4	R101	C-4	R515	D-4	R933	D-8
C219	E-8	C553	G-4	IC202	F-6	R102	C-5	R522	D-4		
C224	E-7	C555	E-4	IC301	B-2	R103	C-5	R523	D-5		
C225	E-7	C557	F-4	IC402	B-8	R107	C-5	R524	D-5		
C226	E-7	C558	F-4	IC502	D-5	R113	C-5	R525	D-5		
C229	F-5	C560	F-4	IC551	F-4	R165	C-3	R532	E-4		
C230	E-6	C561	F-5	IC604	F-8	R166	C-2	R551	G-4		
C237	E-7	C562	F-5	IC801	B-6	R167	C-3	R554	G-4		
C239	F-7	C565	E-4			R170	C-3	R555	G-5		
C241	E-8	C567	F-5	L001	A-3	R175	C-1	R556	F-4		
C245	E-7	C568	F-5	L002	B-5	R183	C-2	R557	G-4		
C248	E-7	C569	F-5	L003	B-5	R184	C-2	R558	F-4		
C250	E-7	C570	F-5	L004	B-3	R201	E-6	R559	F-4		
C253	G-6	C571	F-5	L006	C-5	R203	E-8	R560	F-4		
C306	A-1	C572	G-4	L009	B-3	R206	E-8	R561	E-4		
C307	A-1	C605	G-8	L012	C-3	R207	E-6	R562	F-4		
C308	B-1	C612	E-8	L013	C-5	R209	E-6	R563	F-4		
C309	B-1	C615	E-8	L016	C-5	R212	D-6	R564	F-4		
C310	B-1	C616	E-8	L018	C-5	R213	E-6	R565	F-4		
C312	A-1	C617	E-9	L204	D-7	R214	D-6	R566	F-4		
C313	A-1	C618	E-9	L205	D-6	R215	D-6	R567	F-5		
C314	A-1	C619	E-9	L207	E-7	R216	E-6	R568	E-4		
C315	B-1	C620	E-9	L502	D-4	R217	F-7	R569	F-4		
C316	B-1	C621	E-8	L555	F-5	R218	D-6	R570	F-5		
C317	A-1	C622	E-8			R219	D-7	R571	E-4		
C318	A-1	C623	E-8	Q003	A-5	R220	D-6	R572	E-4		
C319	A-1	C624	E-8	Q024	B-4	R221	D-6	R573	E-4		
C320	A-1	C628	G-7	Q027	C-4	R222	E-7	R574	F-5		
C321	A-1	C629	G-7	Q028	C-4	R225	D-6	R574	F-5		
C322	B-1	C635	E-8	Q029	C-4	R227	E-6	R575	E-4		
C323	A-1	C636	E-8	Q031	D-4	R228	D-6	R576	F-5		

For printed wiring boards

- This board is six-layer print board. However, the patterns of layers two to five have not been included in the diagram.
- Chip parts

Transistor

There are few cases that the part printed on this diagram isn't mounted in this model.

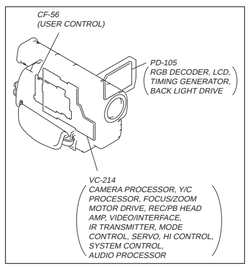
CF-56
(USER CONTROL)
PD-105
RGB DECODER, LCD, TIMING GENERATOR, BACK LIGHT DRIVE
VC-214
CAMERA PROCESSOR, Y/C PROCESSOR, FOCUS/ZOOM MOTOR DRIVE, REC/PB HEAD AMP, VIDEO/INTERFACE, IR TRANSMITTER, MODE CONTROL, SERVO, HI CONTROL, SYSTEM CONTROL, AUDIO PROCESSOR

CAMERA PROCESS, REC/PB HEAD AMP, VIDEO PROCESS, AUDIO, SERVO, SYSTEM CONTROL, MODE CONTROL
VC-214

VC-214 (CAMERA PROCESSOR, Y/C PROCESSOR, FOCUS/ZOOM MOTOR DRIVE, REC/PB HEAD AMP, VIDEO/INTERFACE, IR TRANSMITTER, MODE CONTROL, SERVO, HI CONTROL, SYSTEM CONTROL, AUDIO PROCESSOR) PRINTED WIRING BOARD

— Ref. No. VC-214 Board; 1,000 Series —

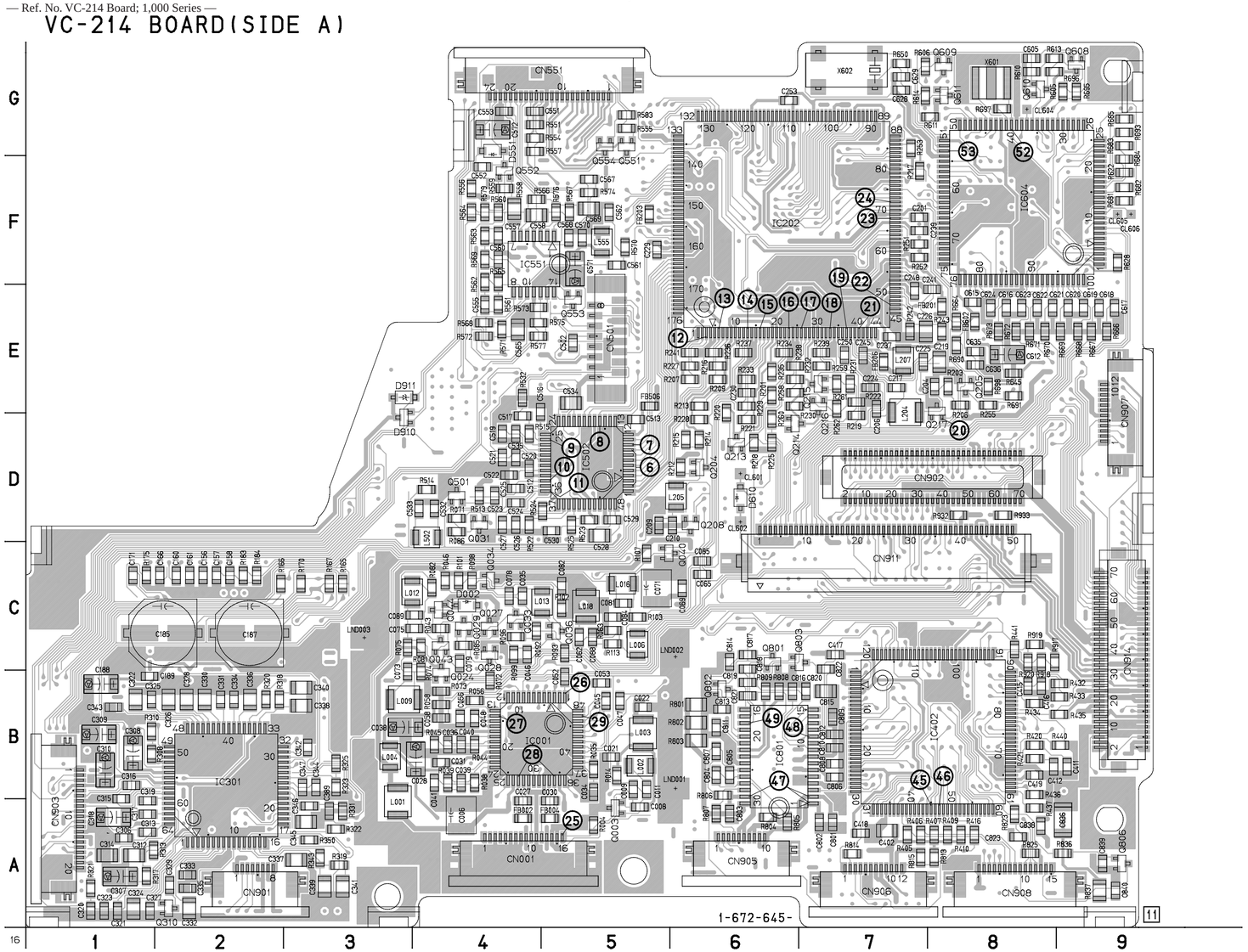

VC-214 BOARD(SIDE B)

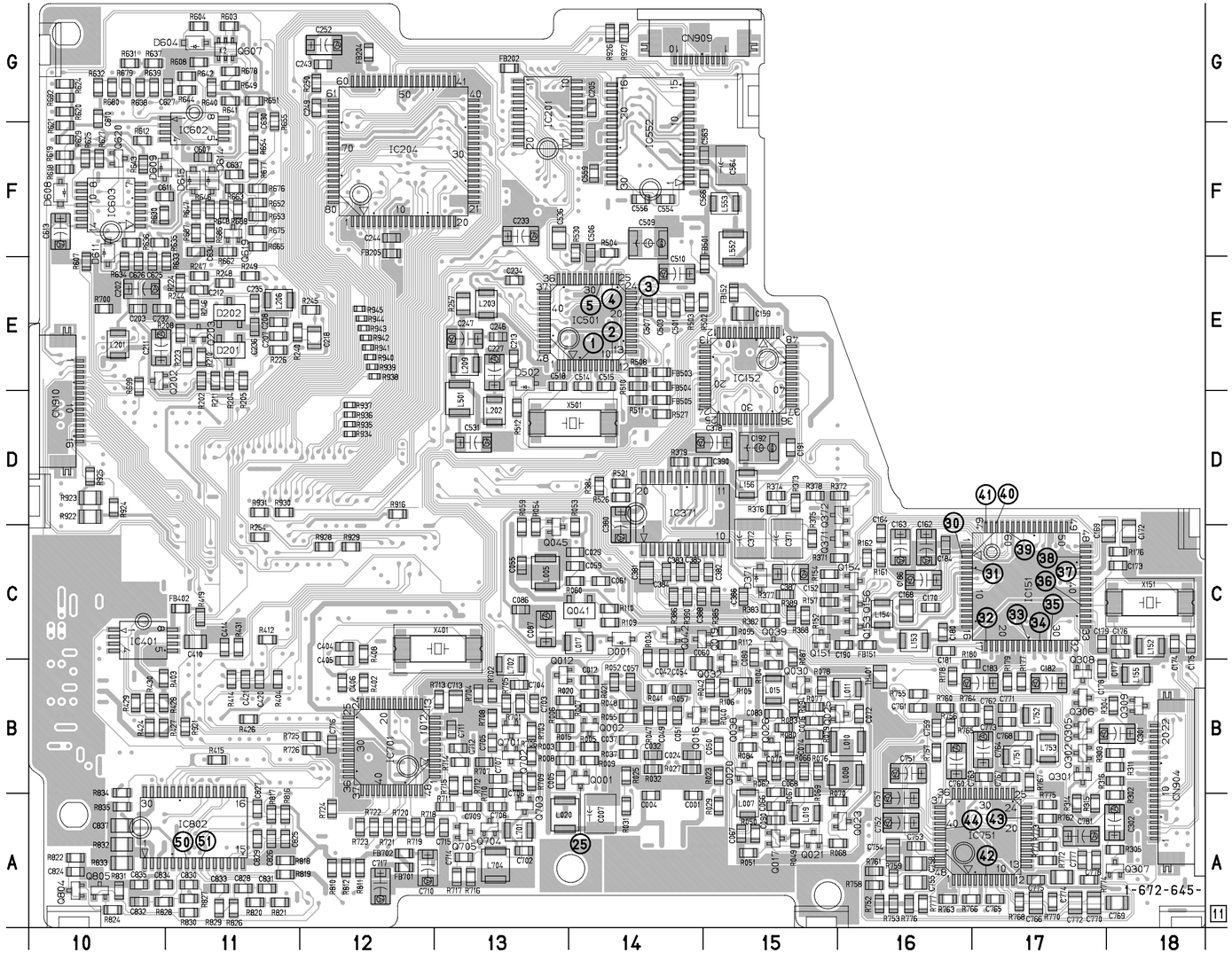

VC-214 BOARD (SIDE B)

C001	A-15	C384	C-14	C827	A-11	Q016	B-15	R084	B-15	R521	D-14	R756	B-17
C004	A-14	C385	C-15	C828	A-11	Q017	A-15	R087	C-15	R526	D-14	R757	B-17
C005	B-14	C386	C-15	C829	A-11	Q020	B-15	R094	B-15	R527	D-14	R758	A-16
C007	A-14	C387	C-15	C830	A-11	Q021	A-16	R095	C-15	R530	F-14	R759	A-16
C012	B-14	C388	C-15	C831	A-12	Q023	A-16	R104	B-15	R603	G-11	R760	B-17
C024	B-15	C390	D-15	C832	A-11	Q025	B-16	R105	B-15	R604	G-11	R761	A-16
C029	C-14	C404	C-12	C833	A-11	Q026	B-15	R106	B-15	R607	E-10	R762	A-17
C032	B-14	C405	B-12	C834	A-11	Q030	B-15	R109	C-14	R608	G-11	R763	A-17
C037	B-14	C406	B-12	C835	A-11	Q032	B-15	R110	C-14	R612	F-11	R764	B-17
C042	B-14	C410	C-11	C837	A-10	Q038	B-15	R112	C-15	R618	F-10	R765	B-17
C049	B-14	C414	C-11			Q039	C-15	R152	C-16	R619	F-10	R766	A-17
C050	B-15	C420	B-11	CN904	B-18	Q041	C-14	R154	C-16	R620	G-10	R767	B-17
C051	B-15	C421	B-11	CN909	G-15	Q042	C-15	R157	C-16	R621	F-10	R768	A-17
C054	B-15	C501	E-15	CN910	D-10	Q045	D-14	R161	C-16	R624	G-10	R770	A-17
C055	C-13	C503	E-14			Q109	C-15	R162	C-16	R625	F-10	R771	A-17
C057	B-14	C506	F-14	D001	C-14	Q151	C-16	R176	C-18	R627	F-10	R772	A-17
C059	C-14	C507	E-14	D201	E-11	Q153	C-16	R177	B-17	R627	G-11	R773	A-17
C060	B-15	C509	F-14	D202	E-11	Q154	C-16	R178	B-17	R629	F-10	R774	A-18
C061	C-14	C510	E-15	D371	C-15	Q156	C-16	R179	B-17	R630	F-11	R775	A-17
C066	A-15	C514	D-14	D502	E-13	Q202	D-11	R180	B-17	R631	G-10	R776	A-16
C067	A-15	C515	D-14	D604	G-11	Q203	E-11	R202	D-11	R632	G-10	R777	A-16
C068	B-15	C518	D-14	D608	F-10	Q301	B-18	R204	D-11	R633	E-11	R810	A-12
C070	B-15	C531	D-13	D609	F-11	Q302	B-18	R205	D-11	R634	E-10	R811	A-12
C072	B-16	C536	F-14	D611	E-10	Q305	B-18	R208	E-11	R635	F-11	R812	A-12
C074	B-16	C554	F-14	D614	F-11	Q306	B-18	R210	E-11	R636	F-10	R816	A-12
C076	B-16	C556	F-14	D615	F-11	Q307	A-18	R211	D-11	R637	G-11	R817	A-12
C080	C-15	C559	F-14			Q308	B-18	R223	E-11	R638	G-11	R818	A-12
C083	B-15	C563	F-15	FB151	C-16	Q309	B-18	R224	E-11	R639	G-11	R819	A-12
C086	C-13	C564	F-15	FB152	E-15	Q371	C-16	R226	E-12	R640	G-11	R820	A-11
C087	C-14	C566	F-15	FB202	G-13	Q372	D-16	R240	E-12	R641	G-11	R821	A-12
C090	A-15	C607	F-11	FB204	G-12	Q607	G-11	R244	E-11	R642	G-11	R822	A-10
C152	C-16	C610	F-10	FB205	E-12	Q619	F-11	R245	E-12	R643	F-11	R824	A-10
C159	E-15	C611	F-11	FB402	C-11	Q620	F-10	R246	E-11	R644	G-11	R826	A-11
C162	C-16	C613	F-10	FB501	E-15	Q701	B-13	R247	E-11	R646	F-11	R827	A-11
C163	C-16	C625	E-11	FB503	E-14	Q702	B-13	R248	E-11	R647	F-11	R828	A-11
C164	C-16	C626	E-11	FB504	D-14	Q703	A-13	R249	E-11	R648	F-11	R829	A-11
C168	C-16	C630	F-11	FB505	D-14	Q704	A-13	R250	G-12	R649	G-11	R830	A-11
C169	C-18	C634	E-11	FB701	A-13	Q705	A-13	R254	C-11	R651	G-11	R831	A-10
C170	C-16	C637	F-11	FB702	A-13	Q804	A-10	R257	E-13	R652	F-11	R832	A-10
C172	C-18	C702	A-13			Q805	A-10	R302	A-18	R653	F-11	R833	A-10
C173	C-18	C703	B-14	IC151	C-17			R303	B-18	R654	F-11	R834	A-10
C174	C-18	C704	B-13	IC152	E-15	R003	B-14	R304	B-18	R655	F-12	R835	A-10
C175	C-18	C705	B-13	IC201	G-14	R005	B-14	R305	A-18	R662	E-11	R916	D-13
C176	C-18	C706	B-13	IC204	F-13	R006	B-14	R311	B-18	R663	F-11	R921	B-11
C177	C-18	C707	B-13	IC371	D-15	R007	B-14	R314	A-18	R665	F-11	R922	D-10
C178	B-18	C708	A-13	IC401	C-11	R008	B-14	R315	A-18	R675	F-11	R923	D-10
C179	C-18	C709	A-13	IC501	E-14	R009	B-14	R316	B-18	R676	F-11	R924	D-10
C180	C-17	C710	A-13	IC552	F-14	R015	B-14	R366	C-15	R677	F-11	R925	D-10
C181	C-17	C711	B-13	IC602	F-11	R020	B-14	R371	C-16	R678	G-11	R926	G-14
C182	B-17	C712	B-13	IC603	F-10	R021	B-14	R372	D-16	R679	G-10	R927	G-14
C183	B-17	C713	B-13	IC701	B-12	R023	B-15	R373	D-15	R680	G-10	R928	C-12
C184	C-17	C714	A-13	IC751	A-17	R025	B-14	R374	D-15	R686	F-11	R929	C-12
C186	C-16	C715	A-13	IC802	A-11	R027	B-15	R375	C-16	R687	F-11	R930	D-12
C190	C-16	C716	B-12			R029	A-15	R376	D-15	R689	F-11	R931	D-11
C191	B-15	C717	A-12	L005	C-14	R031	A-14	R377	C-15	R692	G-10	R934	D-12
C192	D-15	C751	B-16	L007	A-15	R032	B-14	R378	D-16	R699	D-11	R935	D-12
C202	E-11	C751	B-16	L008	B-16	R034	C-14	R379	D-15	R700	E-10	R936	D-12
C203	E-11	C752	A-16	L010	B-16	R037	B-14	R382	C-15	R701	B-13	R937	D-12
C205	G-14	C753	A-16	L011	B-16	R040	B-15	R383	C-15	R702	B-13	R938	E-12
C207	E-12	C754	A-16	L015	B-15	R041	B-14	R384	D-14	R703	B-14	R939	E-12
C208	E-12	C755	A-16	L017	C-14	R042	B-15	R385	C-15	R704	B-13	R940	E-12
C211	E-11	C757	A-16	L019	A-16	R047	B-14	R388	C-16	R705	B-13	R941	E-12
C212	E-11	C758	A-16	L020	A-14	R048	B-14	R389	C-15	R706	B-14	R942	E-12
C213	E-13	C759	B-17	L152	C-18	R049	A-15	R390	C-15	R707	B-13	R943	E-12
C218	E-12	C760	B-17	L153	C-16	R050	A-15	R402	B-12	R708	B-13	R944	E-12
C227	E-13	C761	B-16	L154	C-16	R051	A-15	R403	B-11	R709	B-14	R945	E-12
C232	E-11	C762	B-17	L155	B-18	R052	B-14	R404	B-12	R710	A-13		
C233	F-13	C763	B-17	L156	D-15	R053	D-14	R408	C-12	R711	A-13	TH401	B-16
C234	E-13	C764	B-17	L201	E-10	R053	D-14	R412	C-12	R712	B-13		
C235	E-11	C765	A-17	L202	D-13	R054	D-14	R414	B-11	R713	B-13		
C236	E-11	C766	A-17	L203	E-13	R055	B-14	R415	B-11	R714	B-13		
C243	G-12	C767	B-17	L206	E-12	R057	B-15	R419	C-11	R715	B-13		
C244	F-12	C768	B-17	L209	E-13	R059	D-13	R424	B-11	R716	A-13		
C246	E-13	C769	A-18	L501	D-13	R060	C-14	R426	B-11	R717	A-13		
C247	E-13	C770	A-18	L552	F-15	R062	B-15	R427	B-11	R718	A-13		
C249	G-12	C771	B-17	L553	F-15	R066	B-16	R428	B-11	R719	A-13		
C252	G-12	C772	A-18	L701	A-13	R067	A-15	R429	B-11	R720	A-13		
C301	B-18	C773	B-17	L702	B-13	R068	A-16	R430	B-11	R721	A-12		
C302	A-18	C774	A-17	L704	A-13	R069	A-16	R431	C-11	R722	A-12		
C371	C-15	C775	A-17	L751	B-17	R070	A-16	R502	E-15	R723	A-12		
C372	C-15	C777	A-18	L752	B-17	R076	B-16	R503	E-15	R724	A-12		
C378	D-15	C778	A-18	L753	B-17	R077	B-16	R504	F-14	R725	B-12		
C380	D-14	C781	A-18			R078	B-16	R508	E-14	R726	B-12		
C381	C-14	C824	A-10	Q001	B-14	R079	B-16	R510	D-14	R752	A-16		
C382	C-15	C825	A-12	Q002	B-14	R080	B-15	R511	D-14	R753	A-16		
C383	C-15	C826	A-12	Q012	B-14	R083	B-15	R512	D-13	R755	B-16		

VC-214 BOARD (1/10)

① IC501 ⑤ CAMERA REC/PB 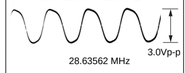	⑦ IC502 ⑩ CAMERA REC LINE REC
② IC501 ⑪ CAMERA REC/PB 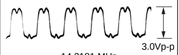	⑦ IC502 ⑩ PB 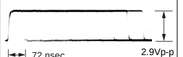
③ IC501 ㉑ CAMERA REC 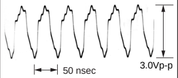	⑧ IC502 ⑯ CAMERA REC/PB LINE REC 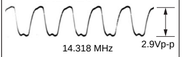
④ IC501 ㉖ CAMERA REC 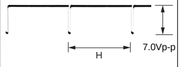	⑨ IC502 ㉘ CAMERA REC 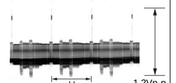
⑤ IC501 ㉘ CAMERA REC 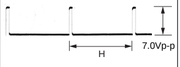	⑩ IC502 ㉞ LINE REC 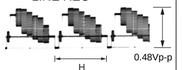
⑥ IC502 ② – ⑨ CAMERA REC/PB LINE REC 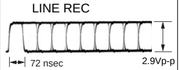	⑪ IC502 ㊳ PB 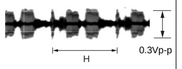

For schematic diagram
• Refer to page 4-11 for printed wiring board.

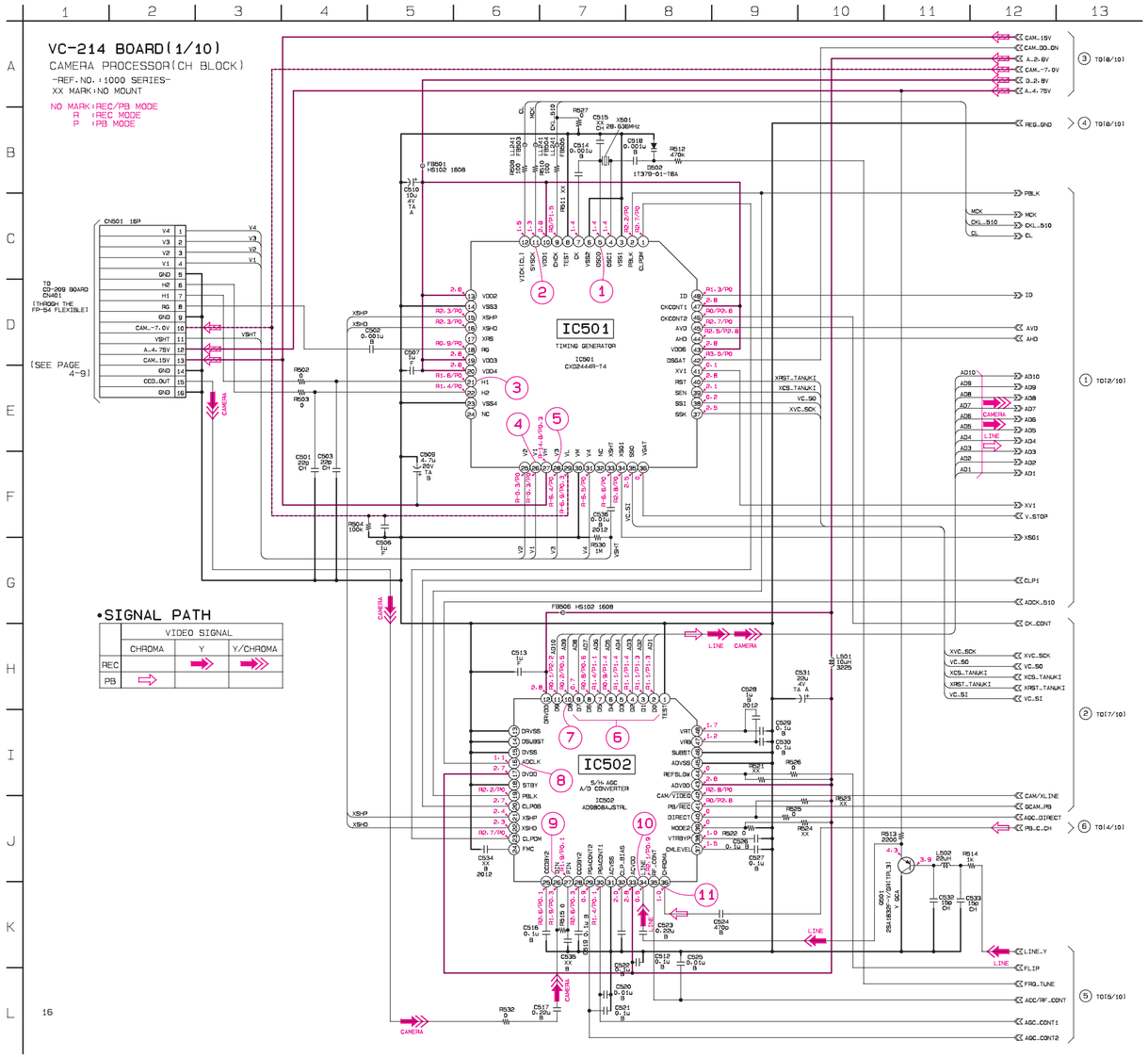

For schematic diagram
- Refer to page 4-11 for printed wiring board.
- Refer to page 4-23 for waveforms.

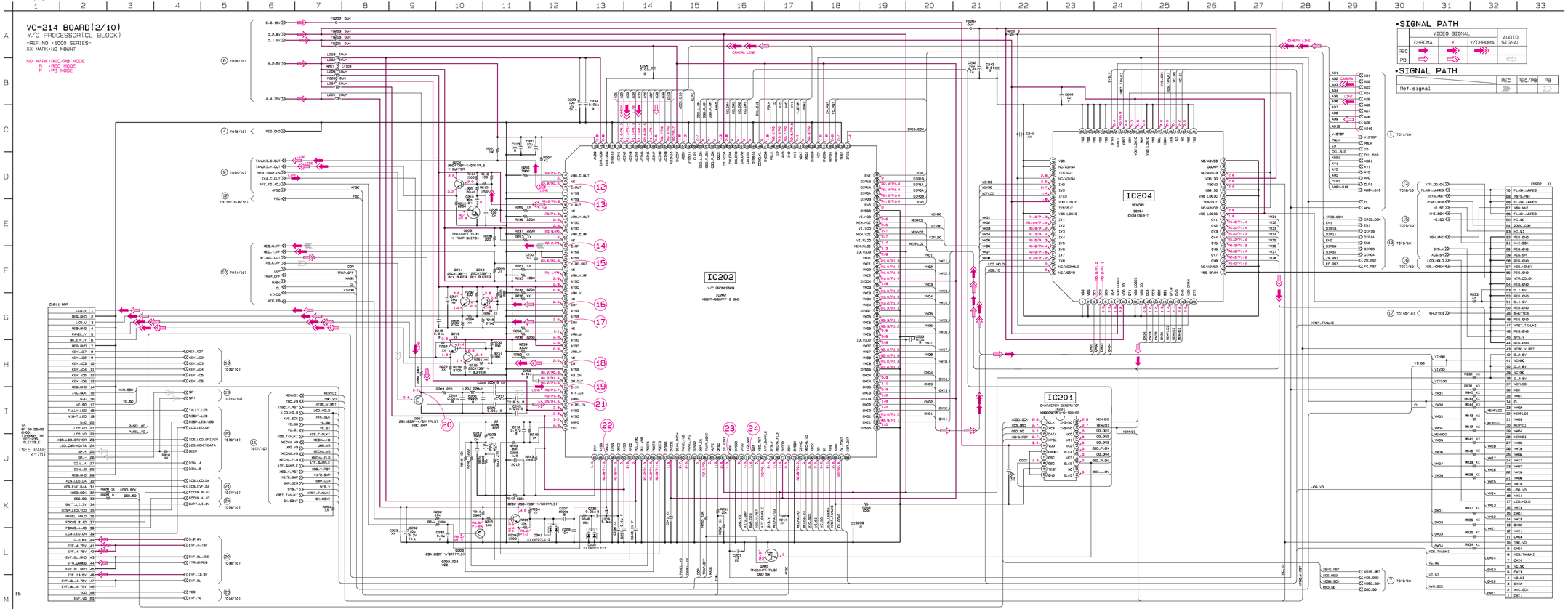

VC-214 BOARD (2/10)

(12) IC202 ③ CAMERA REC/PB 0.45Vp-p, H	(16) IC202 ㉓ CAMERA REC/PB 0.3Vp-p, H	(19) IC202 ㉗ LINE REC 0.3Vp-p, H
(12) IC202 ③ LINE REC 0.45Vp-p, H	(16) IC202 ㉓ LINE REC 0.3Vp-p, H	(20) Q217 ⑥ PB 0.3Vp-p, H
(13) IC202 ⑥ CAMERA REC/PB 0.8Vp-p, H	(17) IC202 ㉖ CAMERA REC/PB 0.1Vp-p, H	(21) IC202 ㉚ PB 0.4Vp-p, 0.1 µsec/div
(13) IC202 ⑥ LINE REC 0.8Vp-p, H	(17) IC202 ㉖ LINE REC 0.3Vp-p, H	(22) IC202 ㉗ LINE REC/PB 3.0Vp-p, 14.318 MHz
(14) IC202 ⑬ CAMERA REC 0.4Vp-p, H	(18) IC202 ㉝ CAMERA REC/PB 1.0Vp-p, H	(23) IC202 ㉘ CAMERA REC/PB 3.0Vp-p, 14.318 MHz
(15) IC202 ⑱ CAMERA REC 0.4Vp-p, 0.2 µsec	(18) IC202 ㉝ LINE REC 1.0Vp-p, H	(24) IC202 ㉜ CAMERA REC/PB 2.8Vp-p, 30 Hz

For schematic diagram
• Refer to page 4-11 for printed wiring board.

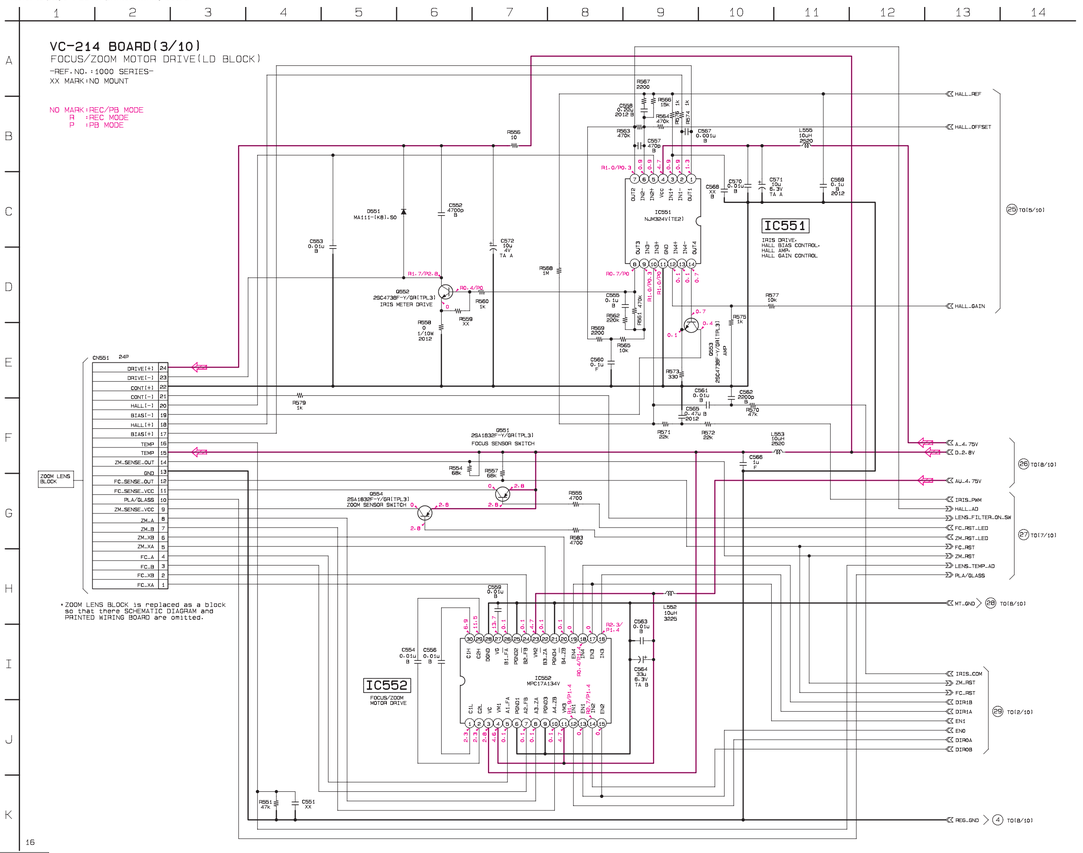

FOCUS/ZOOM MOTOR DRIVE
VC-214 (3/10)

For schematic diagram

- Refer to page 4-11 for printed wiring board.
- Refer to page 4-30 for waveforms.

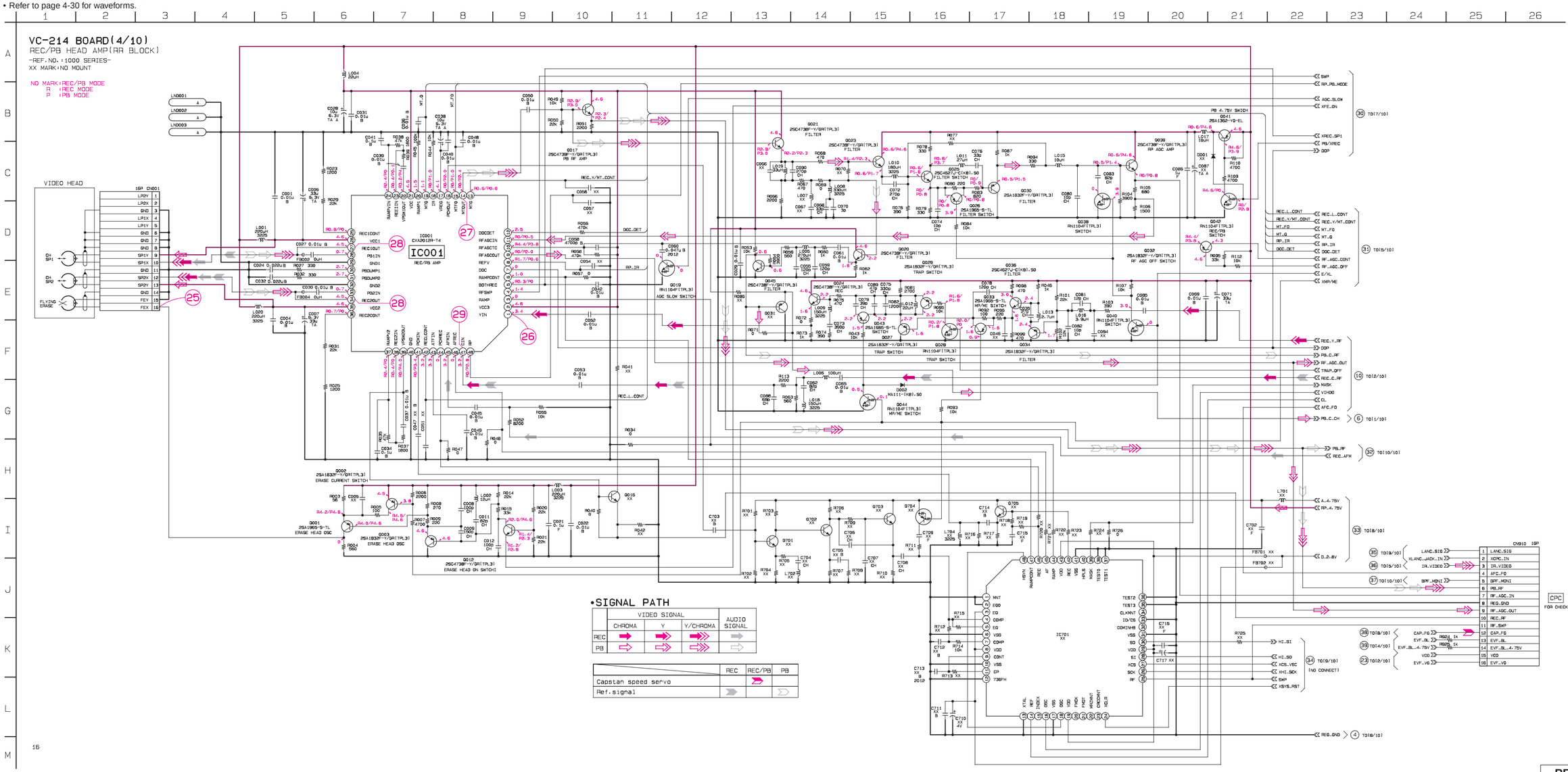

VC-214 BOARD (4/10)

(25) CN001 ⑯, Q001 ⓒ
CAMERA REC

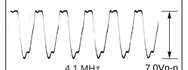

(26) IC001 ①
CAMERA REC

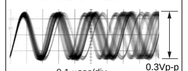

(27) IC001 ⑭
PB

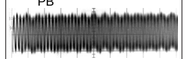

(28) IC001 ㉗,㉞
CAMERA REC

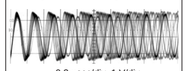

(29) IC001 ㊼
CAMERA REC

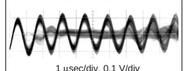

VC-214 BOARD (5/10)

(30) IC151 ③
CAMERA REC/PB

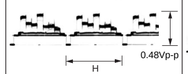

(35) IC151 ㉙
CAMERA REC/PB

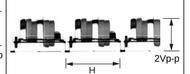

(30) IC151 ③
LINE REC

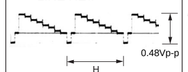

(36) IC151 ㊲
LINE REC

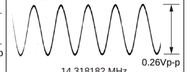

(31) IC151 ⑤
CAMERA REC/PB

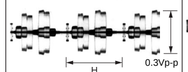

(37) IC151 ㊹
LINE REC

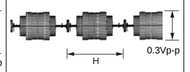

(31) IC151 ⑤
LINE REC

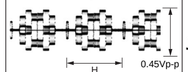

(38) IC151 ㊻
LINE REC

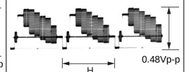

(32) IC151 ⑰
CAMERA REC/PB

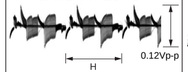

(39) IC151 ㊿
LINE REC

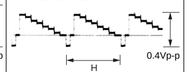

(33) IC151 ㉕
CAMERA REC/PB

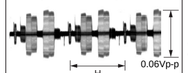

(40) IC151 ㊷
LINE REC

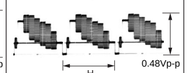

(34) IC151 ㉗
CAMERA REC/PB
IR ON

(41) IC151 ㊹
LINE REC

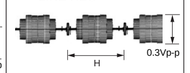

For schematic diagram
• Refer to page 4-11 for printed wiring board.

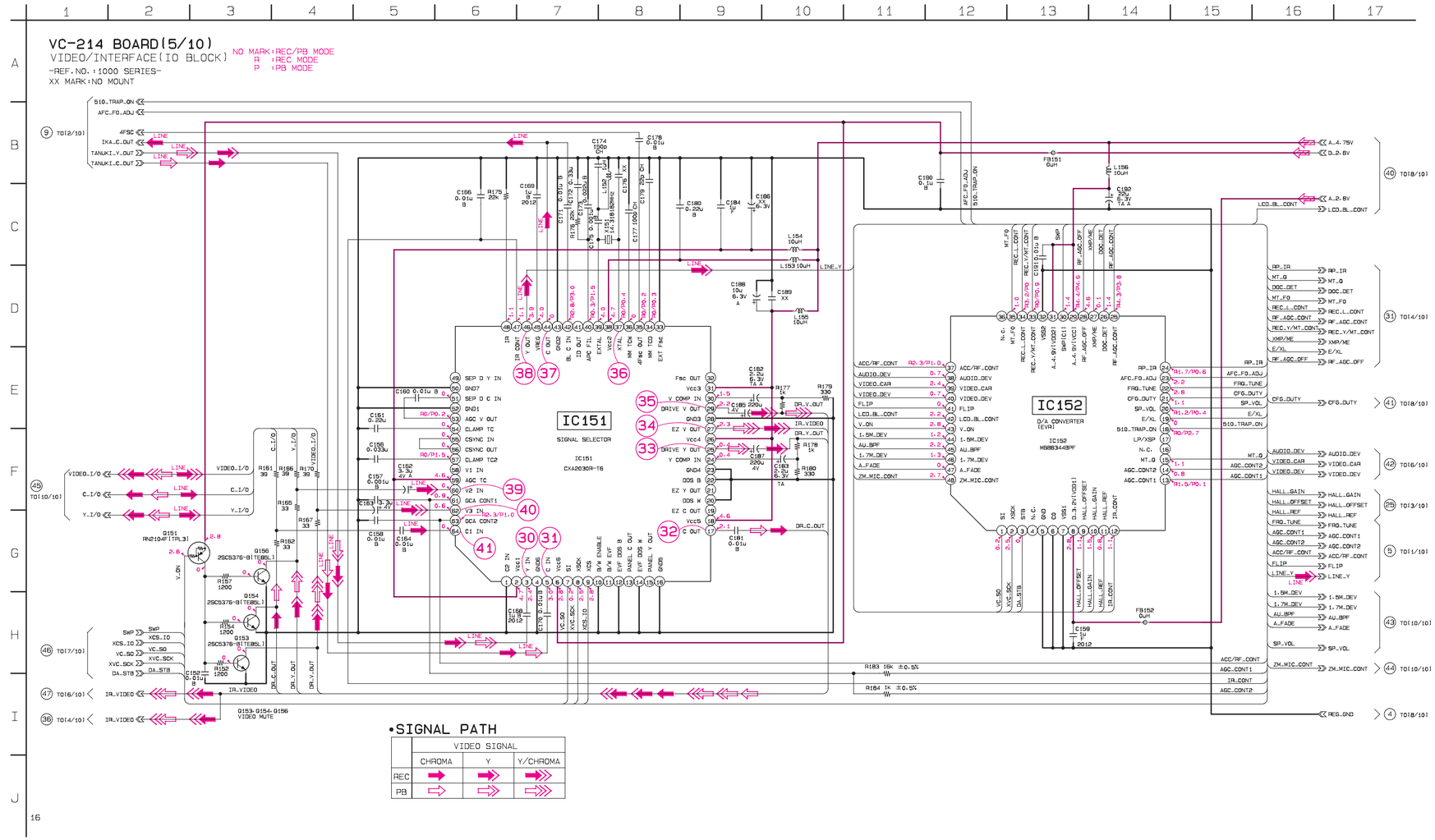

For schematic diagram

• Refer to page 4-11 for printed wiring board.

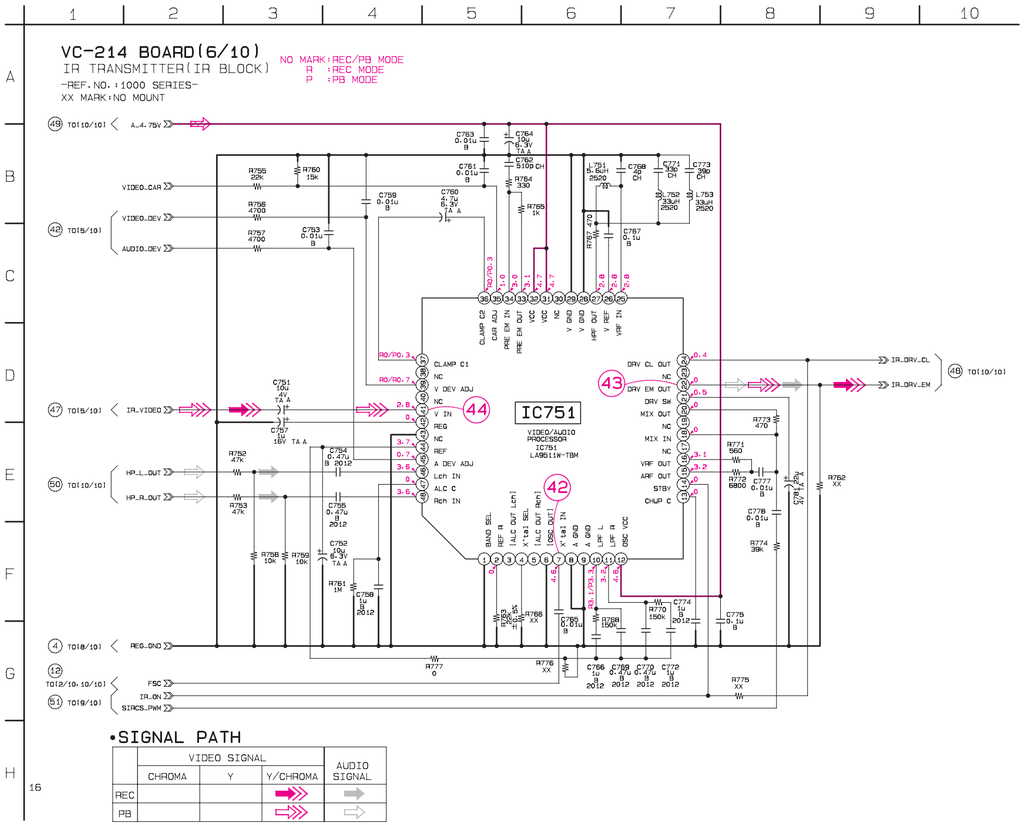

VC-214 BOARD (6/10)

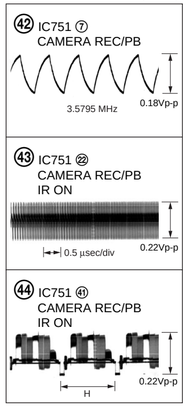

For schematic diagram
• Refer to page 4-11 for printed wiring board.

VC-214 BOARD (7/10)
CAMERA REC/PB

45 IC402 ①

46 IC402 47

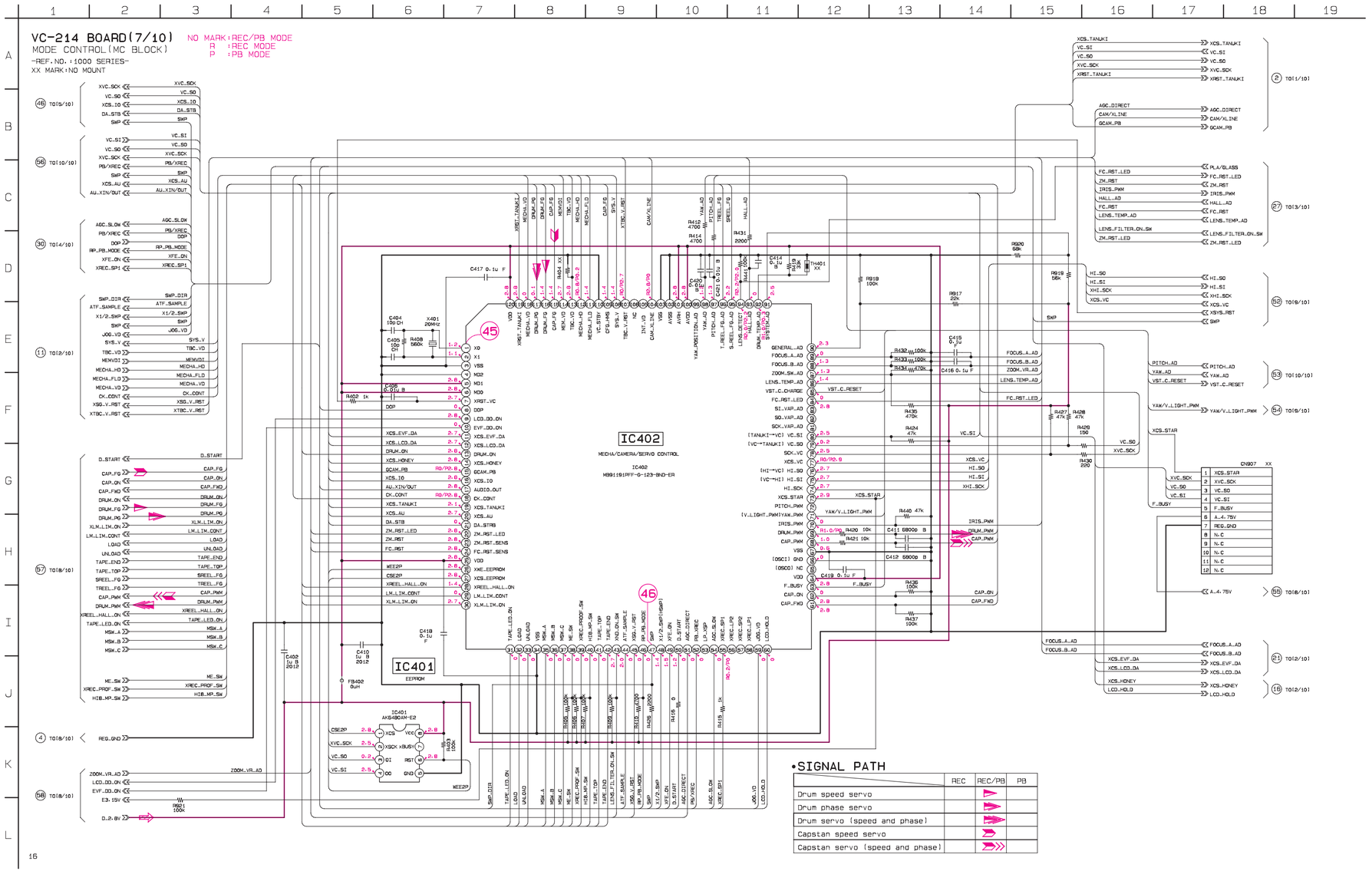

For schematic diagram
• Refer to page 4-11 for printed wiring board.

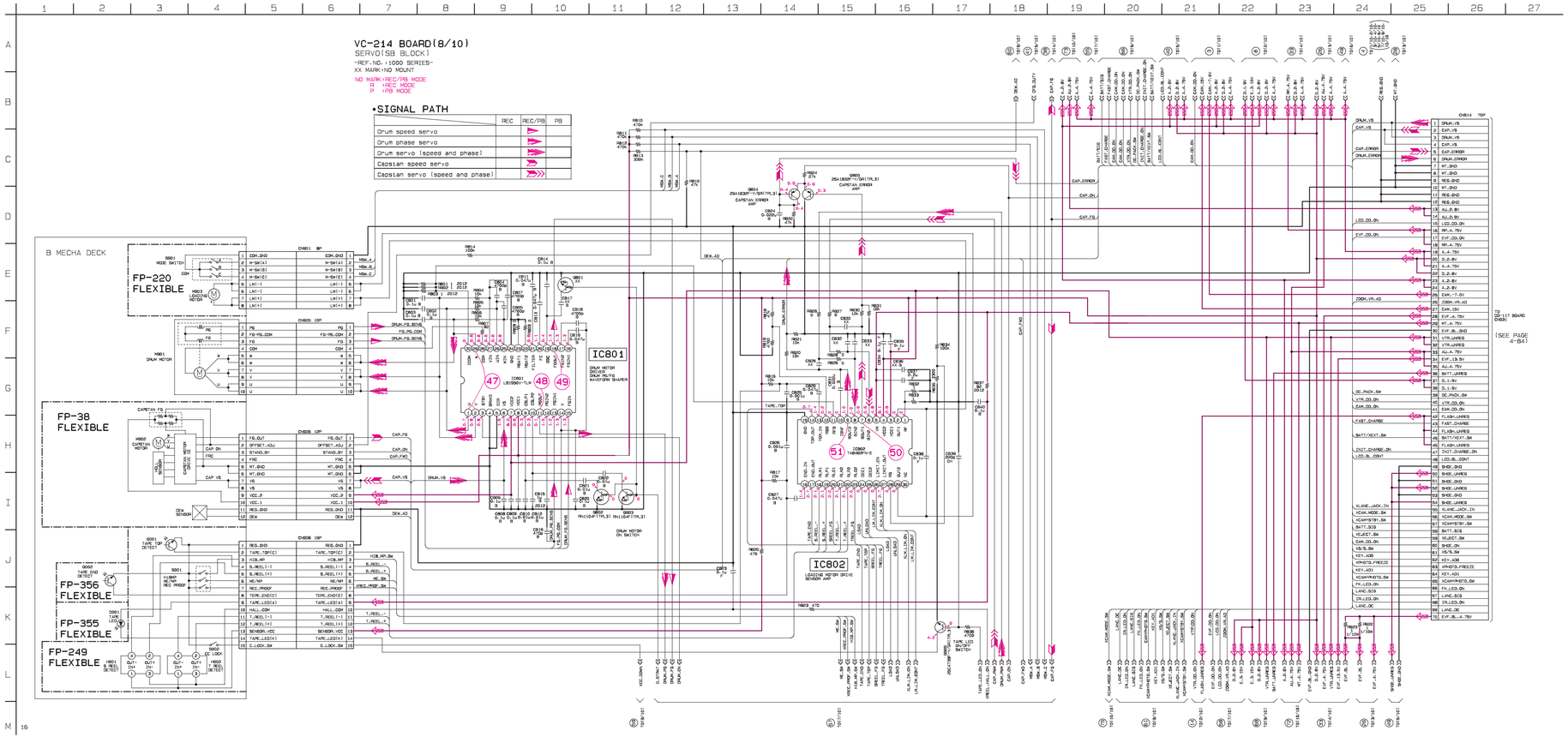

4-39 4-40 4-41

VC-214 BOARD (8/10)
CAMERA REC/PB

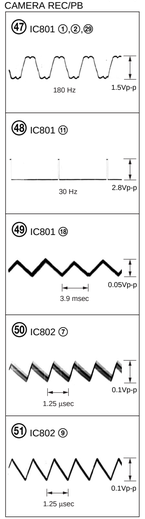

FP-249 (S/T REEL SENSOR), FP-356 (TOP SENSOR), FP-355 (TAPE LED) FLEXIBLE BOARD PRINTED WIRING BOARD
— Ref. No. FP-249, 356, 355 FLEXIBLE board; 5,000 series —

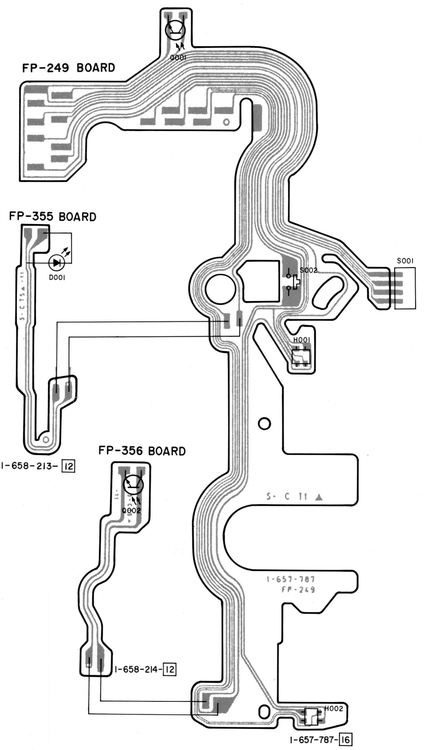

SERVO
VC-214 (8/10)
/ S/T REEL SENSOR, TOP SENSOR, TAPE LED
FP-249, FP-356, FP-355

VL-23 (VIDEO LIGHT) PRINTED WIRING BOARD
— Ref. No. VL-23 Board; 2,000 Series —

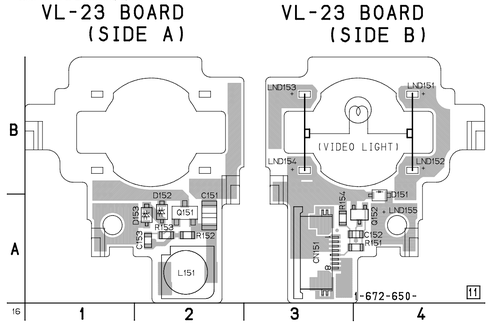

For printed wiring boards
• Chip parts

Transistor

There are few cases that the part printed on this diagram isn't mounted in this model.

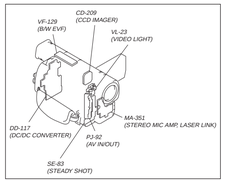

VL-23 BOARD

C151 A-2
C152 A-4
C153 A-2

CN151 A-3

D151 A-4
D152 A-2
D153 A-2

L151 A-2

Q151 A-2
Q152 A-4

R151 A-4
R152 A-2
R153 A-2
R154 A-3

VC-214 BOARD (9/10)
CAMERA REC/PB

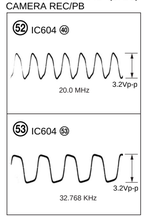

For schematic diagram
• Refer to page 4-11 for printed wiring board.

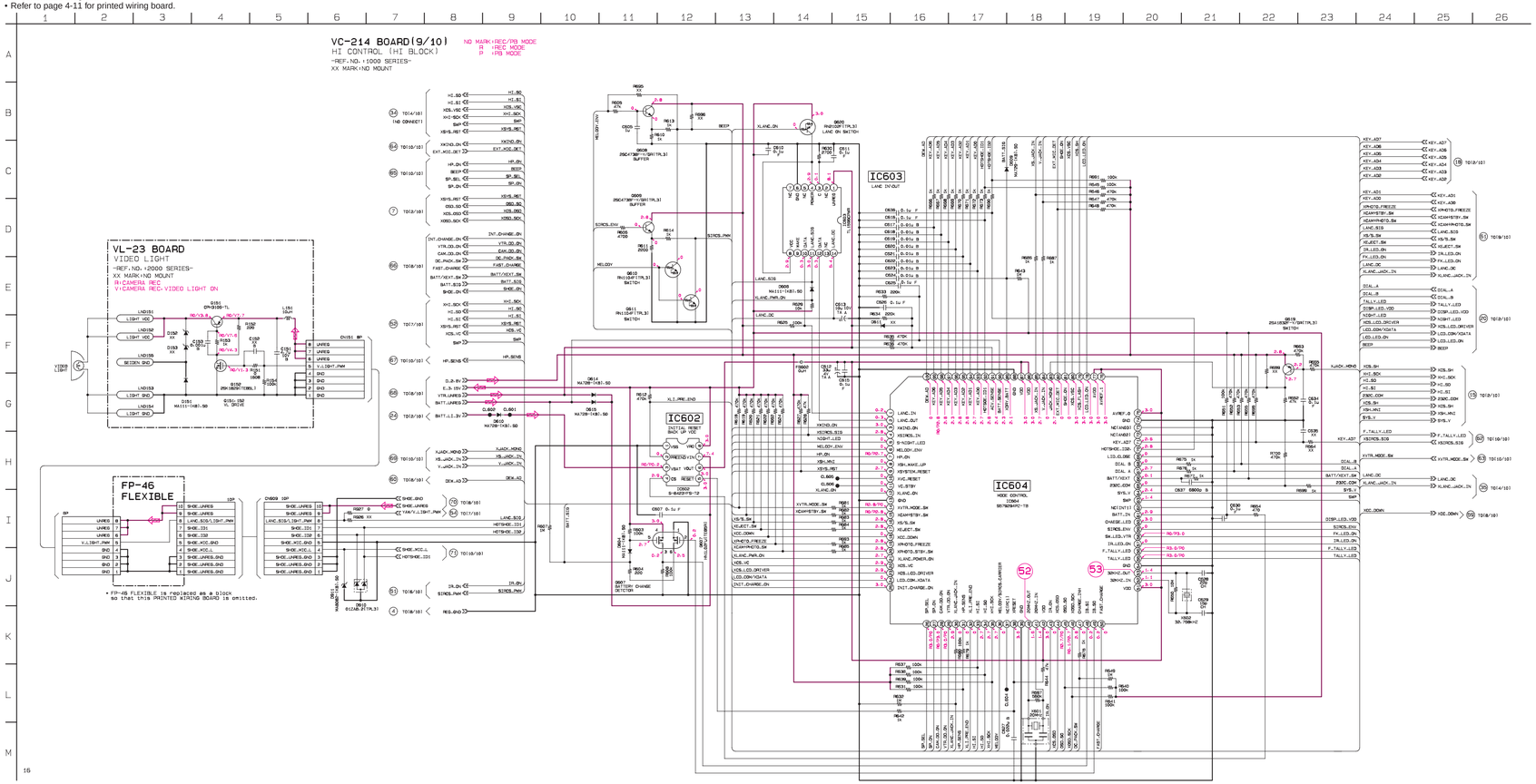

For schematic diagram
• Refer to page 4-11 for printed wiring board.

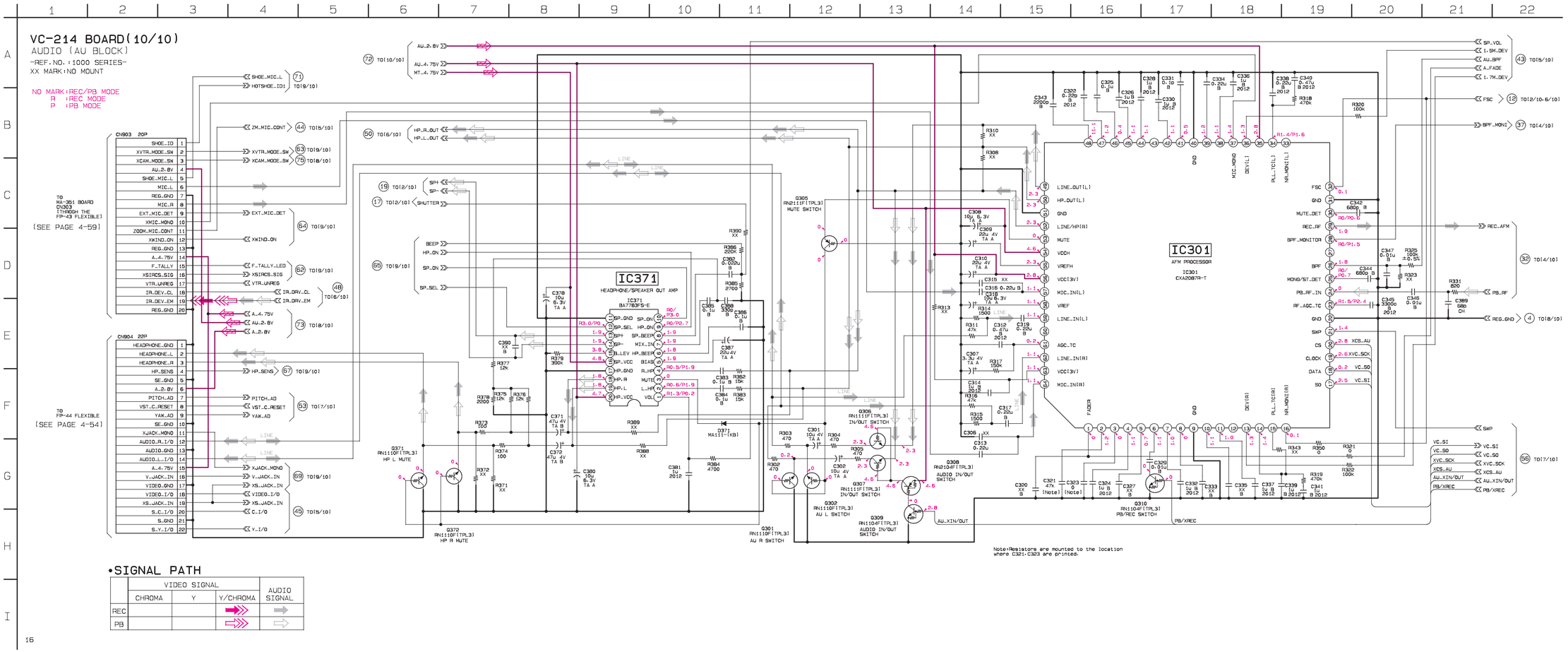

•SIGNAL PATH

	VIDEO SIGNAL			AUDIO SIGNAL
	CHROMA	Y	Y/CHROMA	
REC			➡	⇨
PB			⇨	⇨

SE-83 (STEADY SHOT), PJ-92 (AV IN/OUT) PRINTED WIRING BOARDS

— Ref. No. SE-83, PJ-92 Board; 2,000 Series —

SE-83 BOARD

C451	B-5
C452	D-6
C453	C-2
C454	E-2
C457	C-6
C458	C-6
C459	C-6
C460	D-3
C461	C-6
C462	C-3
C463	D-6
C464	B-6
C465	B-6
C466	C-5
C467	A-2
C468	A-2
C469	A-2
C470	A-2
CN451	A-3
D451	A-2
D452	A-2
IC451	C-6
J451	A-1
L451	B-3
L453	A-2
L454	A-2
R451	B-5
R452	D-6
R453	D-6
R454	B-5
R456	C-6
R457	C-6
R458	C-6
R459	C-6
R460	C-5
R461	B-6
SE451	B-3
SE452	E-3

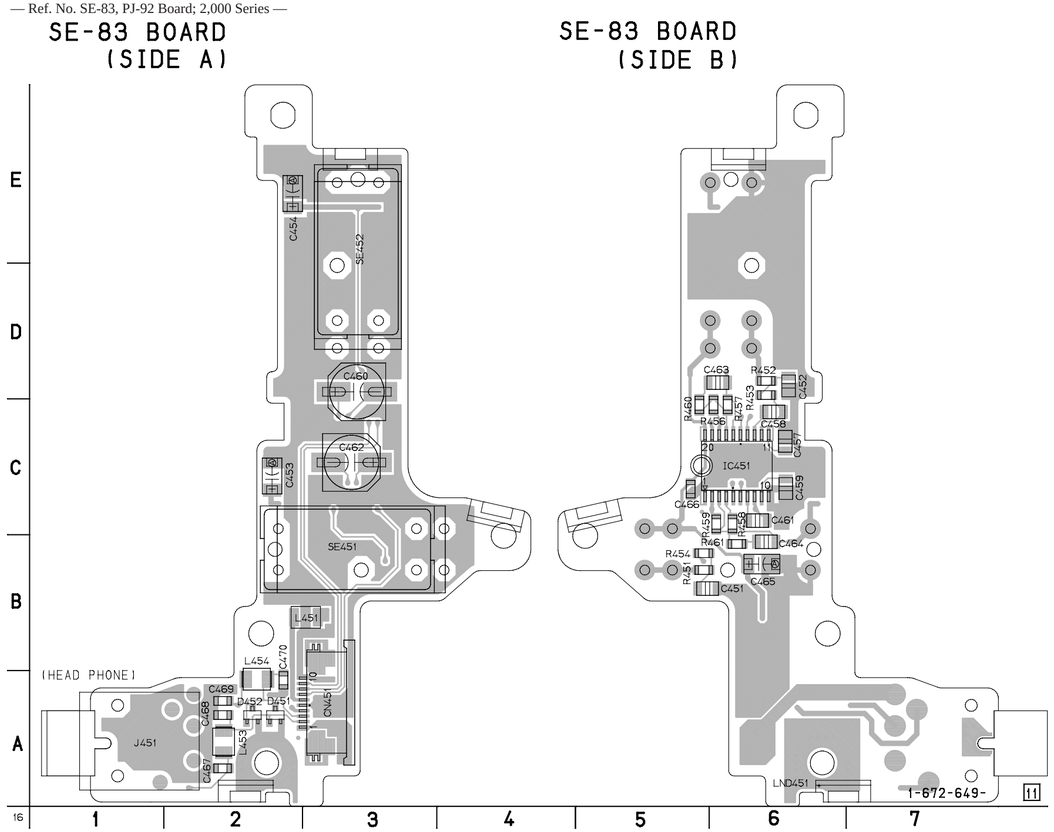

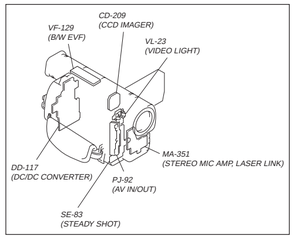

For printed wiring boards

• Chip parts

Transistor Diode

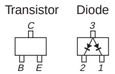

There are few cases that the part printed on this diagram isn't mounted in this model.

PJ-92 BOARD

C101	C-5
C102	D-4
C103	B-5
C104	C-5
C105	A-4
C106	B-4
C107	B-5
C108	A-4
C109	F-4
C110	E-5
C111	A-5
CN101	C-4
D101	A-4
D102	C-5
D103	C-5
D104	E-5
D105	E-5
D106	E-4
J101	D-2
L101	C-4
L102	C-5
L103	B-4
L104	B-4
Q101	E-4
Q102	D-4
R101	D-5
R102	D-4
R103	D-5
R104	D-4
R105	D-4
R106	E-5
R107	F-4
R108	E-5
R109	C-4

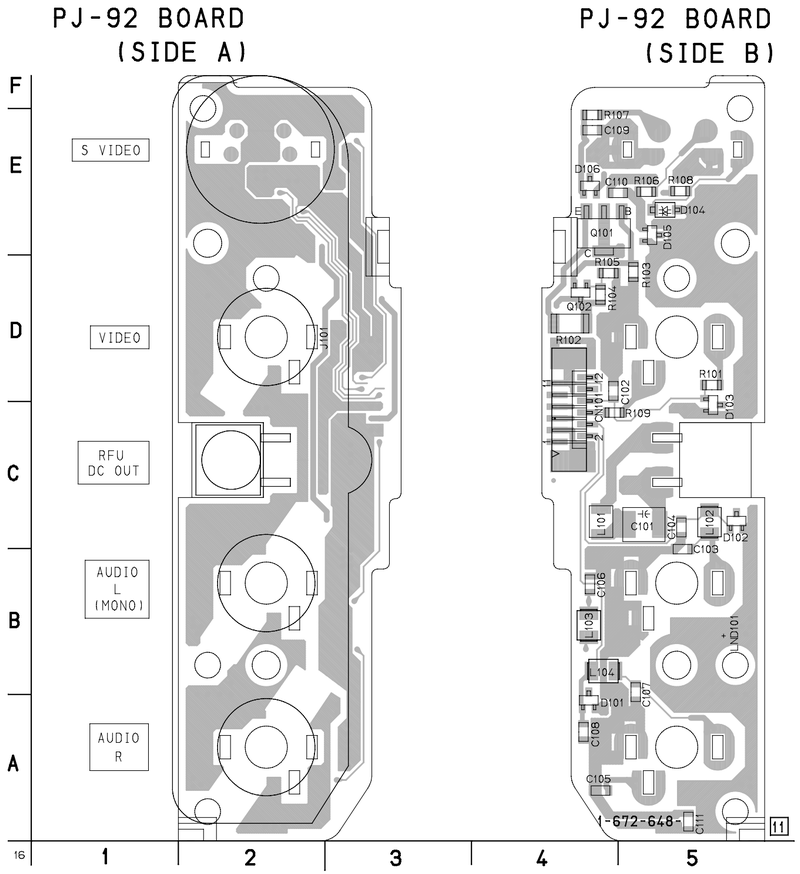

PJ-92 BOARD
AVIN/OUT
-REF.NO.:2000 SERIES-
XX MARK:NO MOUNT
NO MARK:REC/PB MODE

•SIGNAL PATH

	VIDEO SIGNAL			AUDIO SIGNAL
	CHROMA	Y	Y/CHROMA	
REC	➡	➡	➡	➡
PB	⇨	⇨	⇨	⇨

J101 S VIDEO / VIDEO / RFU DC OUT / AUDIO L(MONO) / AUDIO R

Q101 2SB798-T1-DLDK
Q102 2SC4738F-Y/GR(TPL3)
D101 01ZA8.2(TPL3)
D102 01ZA8.2(TPL3)
D103 01ZA8.2(TPL3)
D104 MA8082-(K8).SO
D105 01ZA8.2(TPL3)
D106 01ZA8.2(TPL3)
LND101 GND

(Note):Resistors are mounted to the location where L102-L104 are printed.

CN101 12P

12	S_Y_I/O	S_Y_I/O	12
11	S_GND	S_GND	11
10	S_C_I/O	S_C_I/O	10
9	XS_JACK_IN	XS_JACK_IN	9
8	VIDEO_I/O	VIDEO_I/O	8
7	VIDEO_GND	VIDEO_GND	7
6	V_JACK_IN	V_JACK_IN	6
5	A_4.75V	A_4.75V	5
4	AUDIO_L_I/O	AUDIO_L_I/O	4
3	AUDIO_GND	AUDIO_GND	3
2	AUDIO_R_I/O	AUDIO_R_I/O	2
1	XJACK_MONO	XJACK_MONO	1

FP-44 FLEXIBLE

22	S_Y_I/O
21	S_GND
20	S_C_I/O
19	XS_JACK_IN
18	VIDEO_I/O
17	VIDEO_GND
16	V_JACK_IN
15	A_4.75V
14	AUDIO_L_I/O
13	AUDIO_GND
12	AUDIO_R_I/O
11	XJACK_MONO
10	SE_GND
9	YAW_AD
8	VST_C_RESET
7	PITCH_AD
6	A_2.8V
5	SE_GND
4	HP_SENSE
3	HEADPHONE_R
2	HEADPHONE_L
1	HEADPHONE_GND

TO VC-214 BOARD (10/10) CN904 (SEE PAGE 4-47)

SE-83 BOARD
STEADY SHOT
-REF.NO.:2000 SERIES-
XX MARK:NO MOUNT
NO MARK:REC/PB MODE

SE451 PITCH SENSOR
SE452 YAW SENSOR
IC451 BUFFER UPC6756GH-BJG-E2

(Note):Resistors are mounted to the location where L453·454 are printed.

CN451 10P

10	SE_GND	SE_GND	10
9	YAW_AD	YAW_AD	9
8	VST_C_RESET	VST_C_RESET	8
7	PITCH_AD	PITCH_AD	7
6	A_2.8V	A_2.8V	6
5	SE_GND	SE_GND	5
4	HP_SENSE	HP_SENSE	4
3	HEADPHONE_R	HEADPHONE_R	3
2	HEADPHONE_L	HEADPHONE_L	2
1	HEADPHONE_GND	HEADPHONE_GND	1

J451 (HEADPHONES)
LND451 GND

MA-351 (STEREO MIC AMP, LASER LINK) PRINTED WIRING BOARD

— Ref. No. MA-351 Board; 2,000 Series —

MA-351 BOARD

C301	A-6	IC301	A-4
C302	A-6	IC322	C-7
C303	B-5		
C304	A-5	J301	B-1
C305	B-6		
C306	B-4	L301	B-6
C333	C-8		
C334	C-8	Q301	A-5
C335	C-8	Q302	B-5
C336	D-8	Q303	B-6
C337	C-7	Q304	A-7
C338	C-7	Q305	A-5
C339	C-7		
C340	C-7	R301	A-5
C341	C-2	R302	B-5
C342	C-7	R303	A-5
C343	C-7	R304	B-6
C344	C-1	R305	B-6
C345	C-7	R306	B-4
C346	D-8	R307	B-3
C347	C-2	R309	D-8
C348	D-7	R310	A-7
C349	D-7	R311	B-5
C350	D-2	R312	A-6
C351	D-8	R313	A-5
C352	D-7	R314	B-5
C353	D-7	R315	A-5
C354	D-7	R321	C-1
C355	D-2	R322	B-7
C356	C-6	R323	B-7
C356	C-6	R324	B-2
C357	C-6	R335	C-8
C357	C-6	R336	C-8
C358	C-2	R337	C-8
C359	C-2	R338	C-8
C360	C-7	R339	C-2
C361	C-7	R340	C-7
C362	D-2	R341	C-2
C363	D-2	R342	C-2
C364	D-2	R343	C-2
C365	D-2	R344	C-2
C366	D-2	R345	D-7
C367	D-2	R346	C-7
C368	D-2	R347	D-7
C369	C-6	R348	D-2
C370	D-2	R349	D-2
C371	C-6	R350	C-2
C372	C-6	R351	C-2
C373	D-2	R352	C-7
C374	C-6	R353	D-2
C375	D-2	R354	D-2
C376	C-6	R355	D-2
C377	A-7	R356	D-2
C378	D-2	R357	D-2
		R358	D-2
CN301	B-6	R359	C-6
CN302	B-7	R360	C-7
CN303	B-5	R361	D-2
		R362	D-2
D301	A-3	R363	D-2
D302	A-3	R364	C-2
D303	B-2	R365	C-2
D305	B-4	R366	C-2
D307	D-2	R367	C-2
D308	B-4	R368	D-2
D309	A-3	R369	C-2
D321	C-1		
D322	A-2	S301	D-1
D323	A-7	S302	D-7
F301	A-6	S303	C-6

MA-351 BOARD(SIDE A)

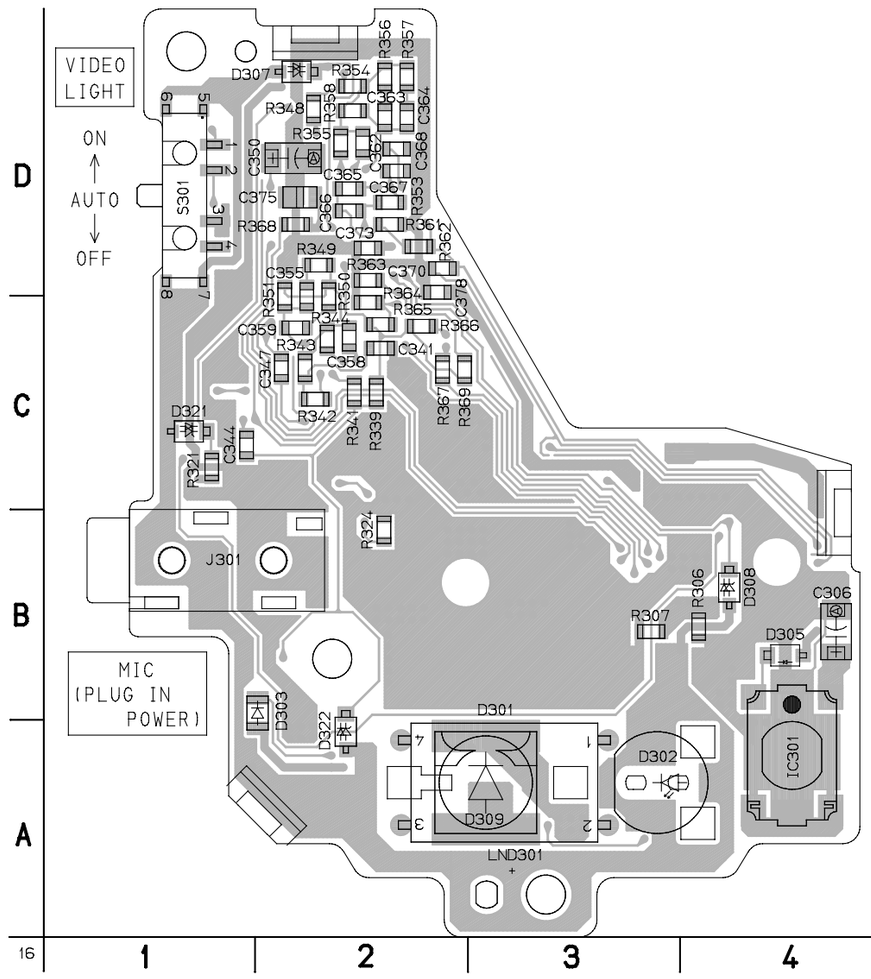

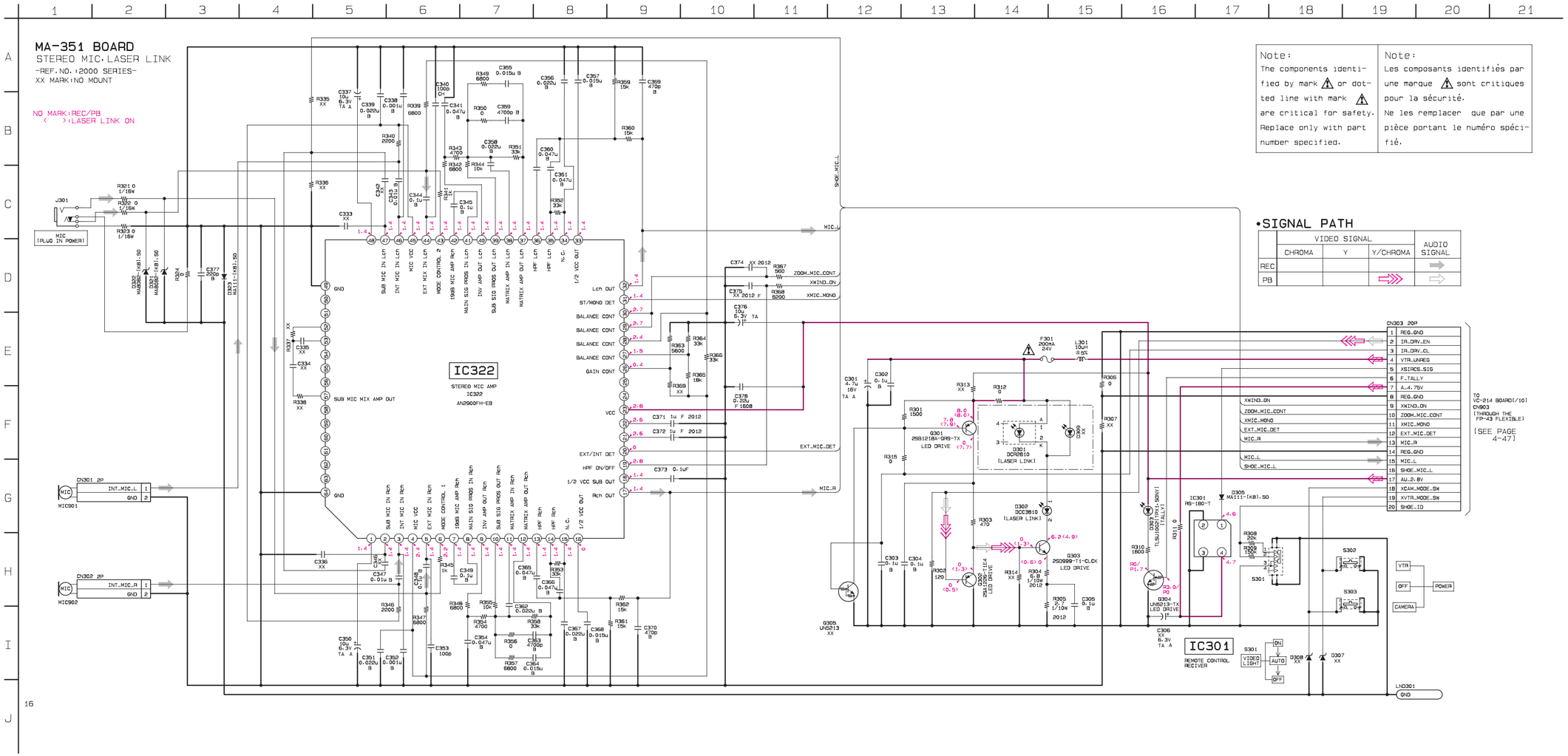
MA-351 BOARD
STEREO MIC. LASER LINK
-REF.NO.:2000 SERIES-
XX MARK:NO MOUNT
NO MARK:REC/PB
( ):LASER LINK ON
IC322
STEREO MIC AMP
IC322
AN2900FH-EB
IC301
REMOTE CONTROL
RECIVER
SUB MIC MIX AMP OUT
SUB MIC IN LCH
INT MIC IN LCH
MIC VCC
EXT MIX IN LCH
MODE CONTROL 2
(SUB) MIC AMP Rch
MAIN SIG PROS IN LCH
INV AMP OUT LCH
SUB SIG PROS OUT LCH
MATRIX AMP IN LCH
MATRIX AMP OUT LCH
HPF LCH
N.C.
1/2 VCC OUT
Lch OUT
ST/MONO DET
BALANCE CONT
GAIN CONT
VCC
EXT/INT DET
HPF ON/OFF
1/2 VCC SUB OUT
Rch OUT
SUB MIC IN Rch
INT MIC IN Rch
MODE CONTROL 1
MAIN SIG PROS IN Rch
INV AMP OUT Rch
SUB SIG PROS OUT Rch
MATRIX AMP IN Rch
MATRIX AMP OUT Rch
HPF Rch
SHOE_MIC_L
MIC_L
MIC_R
EXT_MIC_DET
ZOOM_MIC_CONT
XWIND_ON
XMIC_MONO
MIC (PLUG IN POWER)
CN301 2P
INT_MIC_L
GND
MIC901
CN302 2P
INT_MIC_R
GND
MIC902
CN303 20P
REG_GND
IR_DRV_EN
IR_DRV_CL
VTR_UNREG
XSIRCS_SIG
F_TALLY
A_4.75V
REG_GND
XWIND_ON
ZOOM_MIC_CONT
XMIC_MONO
EXT_MIC_DET
MIC_R
REG_GND
MIC_L
SHOE_MIC_L
AU_2.8V
XCAM_MODE_SW
XVTR_MODE_SW
SHOE_ID
TO VC-214 BOARD(1010) CN903 (THROUGH THE FP-43 FLEXIBLE)
(SEE PAGE 4-47)
LND301
GND
VTR
OFF
POWER
CAMERA
VIDEO LIGHT
AUTO
ON
OFF
Note:
The components identified by mark ⚠ or dotted line with mark ⚠ are critical for safety. Replace only with part number specified.
Note:
Les composants identifiés par une marque ⚠ sont critiques pour la sécurité.
Ne les remplacer que par une pièce portant le numéro spécifié.
•SIGNAL PATH
VIDEO SIGNAL
CHROMA
Y
Y/CHROMA
AUDIO SIGNAL
REC
PB

PD-105 (RGB DECODER, LCD, TIMING GENERATOR, BACK LIGHT DRIVE) PRINTED WIRING BOARD

— Ref. No. PD-105 Board; 10,000 Series —

PD-105 BOARD

C5501	B-5	L5504	C-9	R5647	D-8
C5502	B-4	L5601	A-8	R5648	D-5
C5503	C-8	L5603	A-4	R5651	D-8
C5504	A-4	L5604	A-8	R5652	D-8
C5505	A-4	L5605	C-4	R5653	D-4
C5506	B-8	L5701	D-2	R5654	D-3
C5507	A-9			R5657	C-4
C5508	B-8	Q5501	C-8	R5658	D-4
C5509	B-9	Q5601	B-4	R5659	D-4
C5511	C-8	Q5602	B-4	R5660	D-4
C5512	C-7	Q5605	C-3	R5661	D-5
C5513	C-7	Q5606	C-3	R5663	D-4
C5514	C-8	Q5607	C-3	R5664	D-5
C5515	C-8	Q5608	C-3	R5665	D-5
C5516	C-8	Q5701	C-9	R5666	D-7
C5517	C-7	Q5702	C-10	R5667	D-7
C5518	C-9			R5668	D-7
C5519	A-8	R5501	B-8	R5669	D-7
C5520	C-9	R5502	B-8	R5670	D-7
C5521	C-9	R5505	B-8	R5671	D-4
C5601	B-8	R5508	B-7	R5672	D-4
C5603	B-4	R5509	B-7	R5673	D-7
C5604	C-3	R5510	B-9	R5674	D-8
C5605	C-4	R5511	B-9	R5676	D-7
C5607	B-4	R5512	B-7	R5678	D-4
C5608	C-3	R5513	B-8	R5679	D-8
C5610	C-4	R5516	B-8	R5680	D-8
C5612	B-5	R5517	B-7	R5681	D-8
C5616	C-3	R5518	B-7	R5682	D-7
C5618	D-3	R5519	C-9	R5683	D-8
C5619	D-8	R5520	C-9	R5684	D-8
C5620	D-5	R5521	B-8	R5685	D-9
C5621	C-8	R5522	B-8	R5686	C-9
C5622	C-5	R5528	C-9	R5688	C-4
C5623	C-8	R5531	C-8	R5692	B-4
C5624	B-9	R5532	C-9	R5693	B-4
C5625	B-8	R5537	C-5	R5694	B-3
C5633	B-3	R5541	D-8	R5695	B-3
C5701	D-3	R5542	D-9	R5696	D-5
C5702	D-3	R5544	C-8	R5697	C-5
C5703	C-9	R5545	B-9	R5698	D-3
C5704	C-1	R5602	C-8	R5699	D-4
C5705	C-1	R5603	D-3	R5701	A-11
C5706	C-10	R5604	D-9	R5702	A-11
C5801	A-10	R5605	C-7	R5703	C-9
		R5606	C-5	R5704	C-10
CN5501	B-5	R5607	B-7	R5705	C-10
CN5601	D-5	R5608	C-5	R5706	C-10
CN5701	D-1	R5610	B-4	R5707	D-1
CN5801	A-3	R5612	B-4	R5708	C-11
CN5802	A-2	R5613	B-4	R5709	D-1
CN5803	A-3	R5615	B-3	R5710	C-10
CN5804	A-5	R5617	B-4	R5801	C-7
CN5805	A-1	R5619	B-4	R5802	C-7
		R5620	B-3	R5803	A-7
D5601	B-4	R5621	C-3	R5804	A-7
D5604	C-5	R5622	B-3	R5805	A-11
D5605	B-4	R5623	B-3	R5806	A-7
D5701	A-11	R5624	B-3	R5807	B-2
D5702	A-11	R5625	C-5	R5808	B-3
D5703	D-11	R5626	C-4	R5809	B-2
D5704	D-2	R5627	B-5	R5810	B-3
		R5628	C-5	R5811	A-10
IC5501	B-5	R5629	B-3	R5812	A-10
IC5502	C-8	R5630	B-3		
IC5601	C-4	R5631	C-4	S5801	D-7
IC5602	C-3	R5632	B-4	S5802	C-7
IC5701	C-10	R5637	C-5	S5803	B-7
IC5801	A-10	R5640	C-3	S5804	A-7
		R5641	C-9		
L5501	A-9	R5643	C-9	T5701	C-2
L5502	A-8	R5644	C-3		
L5503	A-8	R5646	C-5		

PD-105 BOARD(SIDE A)

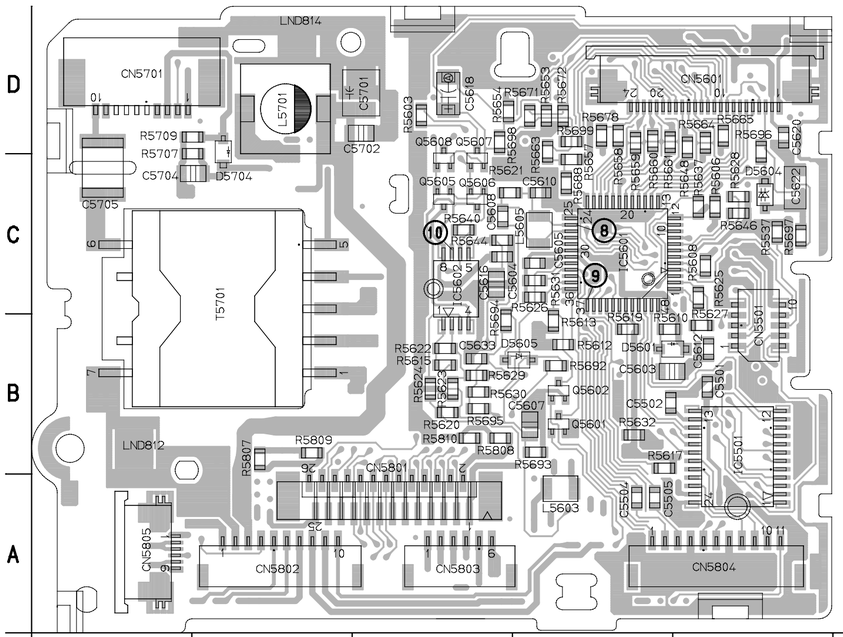

PD-105 BOARD(1/2)

RGB DECODER, LCD(RGB, LCD BLOCK)

-REF.NO. :10000 SERIES-

XX MARK:NO MOUNT

NO MARK:REC/PB MODE

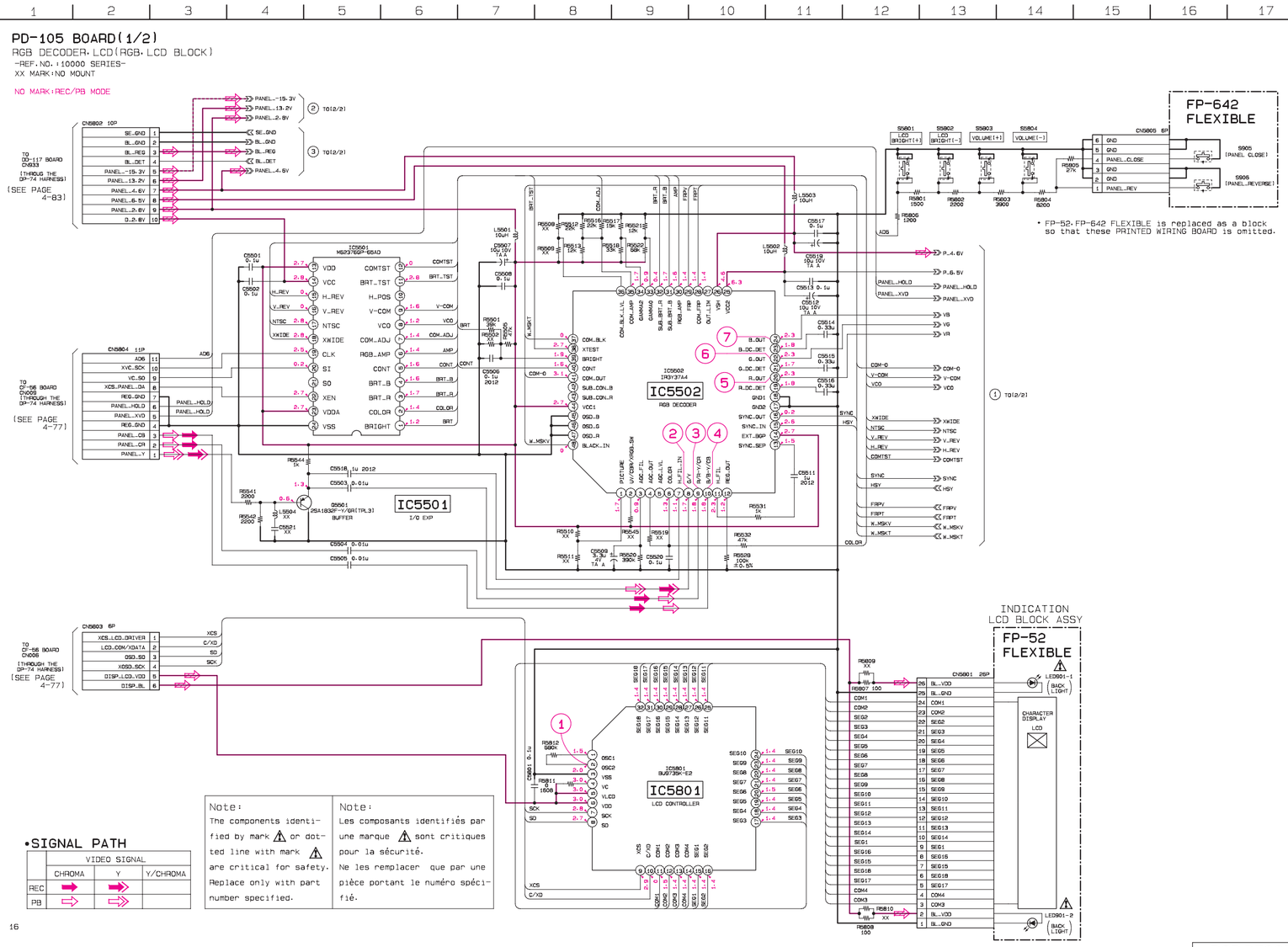
FP-642 FLEXIBLE
FP-52 FLEXIBLE
IC5501 I/O EXP
IC5502 RGB DECODER
IC5801 LCD CONTROLLER
CHARACTER DISPLAY LCD
INDICATION LCD BLOCK ASSY
• FP-52, FP-642 FLEXIBLE is replaced as a block so that these PRINTED WIRING BOARD is omitted.

•SIGNAL PATH

	VIDEO SIGNAL		
	CHROMA	Y	Y/CHROMA
REC	➡	➡	
PB	⇨	⇨	

Note:
The components identified by mark ⚠ or dotted line with mark ⚠ are critical for safety. Replace only with part number specified.

Note:
Les composants identifiés par une marque ⚠ sont critiques pour la sécurité. Ne les remplacer que par une pièce portant le numéro spécifié.

16

PD-105 BOARD (1/2)

CAMERA REC/PB

① IC5801 ②

② IC5502 ⑧

③ IC5502 ⑨

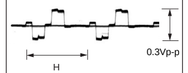

④ IC5502 ⑩

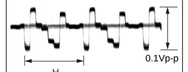

⑤ IC5502 ⑳

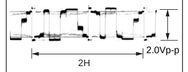

⑥ IC5502 ㉒

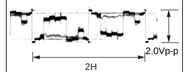

⑦ IC5502 ㉔

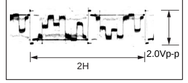

For schematic diagram
• Refer to page 4-60 for printed wiring board.

PD-105 BOARD (2/2)
CAMERA REC/PB

⑧ IC5601 ㉖

⑨ IC5601 ㊲

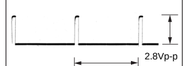

⑩ IC5602 ⑦

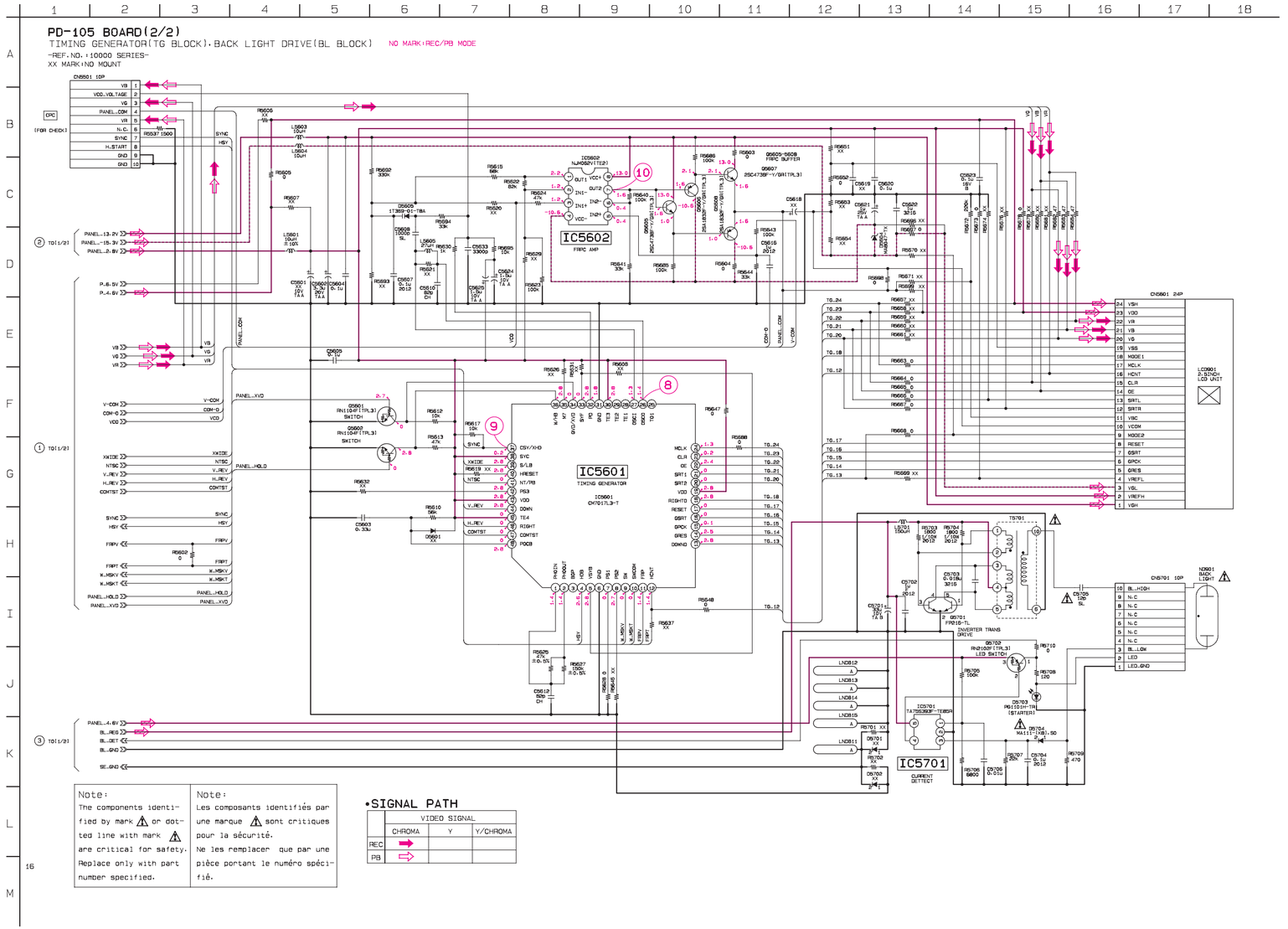

VF-129 (B/W EVF) PRINTED WIRING BOARD

— Ref. No. VF-129 Board; 3,000 Series —

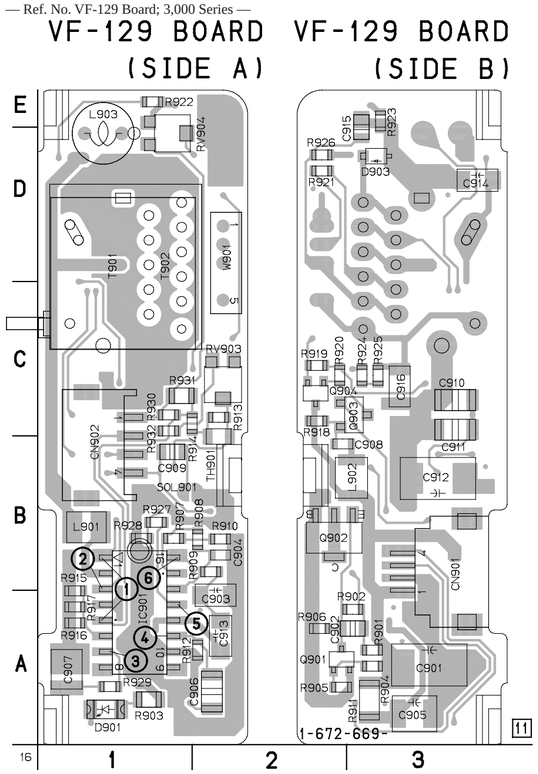

VF-129 BOARD

C901	A-3	R905	A-2
C902	A-3	R906	A-2
C903	A-2	R907	B-1
C904	B-2	R908	B-2
C905	A-3	R909	B-2
C906	A-2	R910	B-2
C907	A-1	R911	A-3
C908	C-2	R912	A-2
C909	B-1	R913	C-2
C910	C-3	R914	C-2
C911	C-3	R915	B-1
C912	B-3	R916	A-1
C913	A-2	R917	A-1
C914	D-3	R918	C-2
C915	E-3	R919	C-2
C916	C-3	R920	C-2
		R921	D-2
CN901	B-3	R922	E-1
CN902	B-1	R923	E-3
		R924	C-3
D901	A-1	R925	C-3
D903	D-3	R926	D-2
		R927	B-1
IC901	A-1	R928	B-1
		R929	A-1
L901	B-1	R930	C-1
L902	B-3	R931	C-1
L903	D-1	R932	C-1
Q901	A-2	RV903	C-2
Q902	B-2	RV904	D-1
Q903	C-3		
Q904	C-2	T901	D-1
		T902	D-1
R901	A-3		
R902	A-3	TH901	B-2
R903	A-1		
R904	A-3	W901	D-2

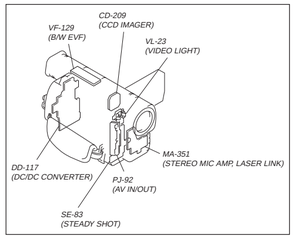

For printed wiring boards

• Chip parts

Transistor

There are few cases that the part printed on this diagram isn't mounted in this model.

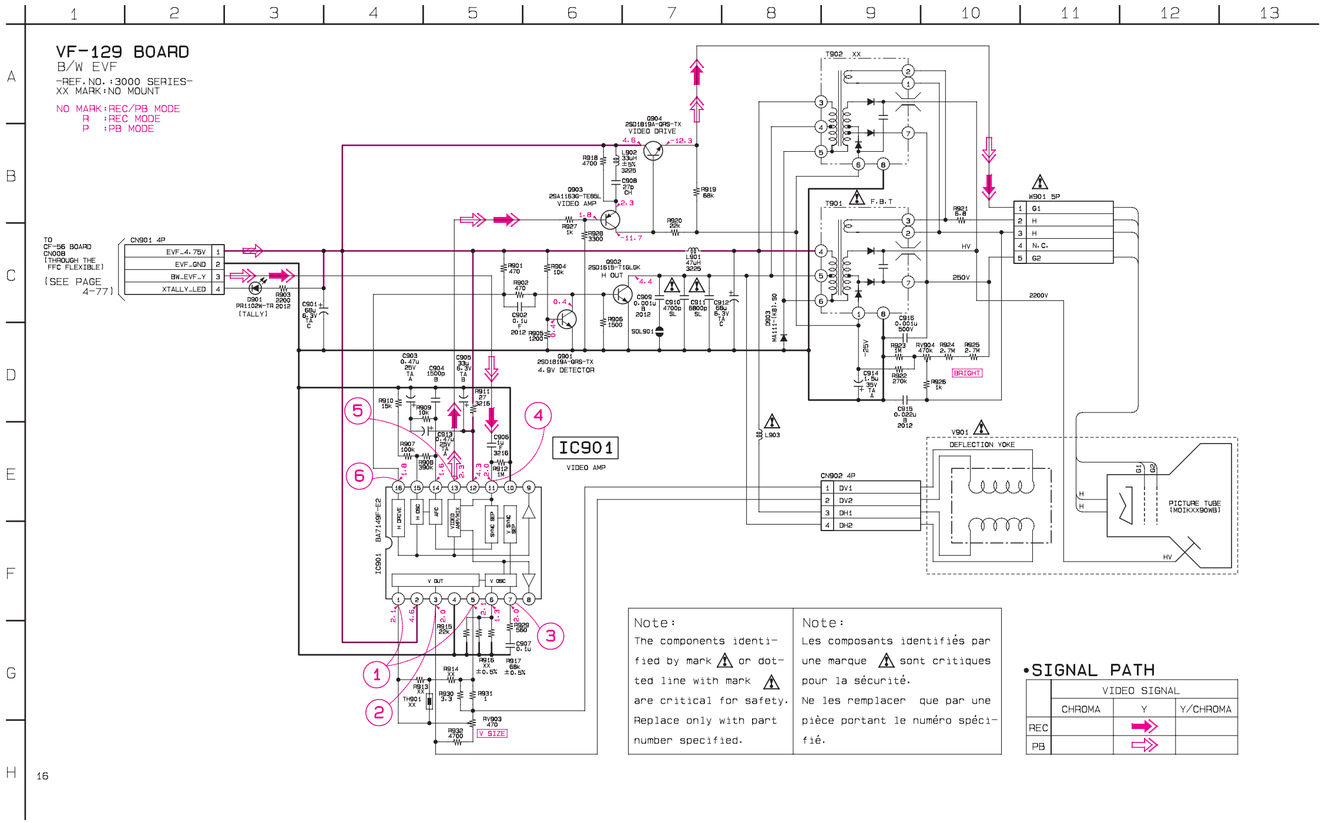

VF-129 BOARD

CAMERA REC/PB

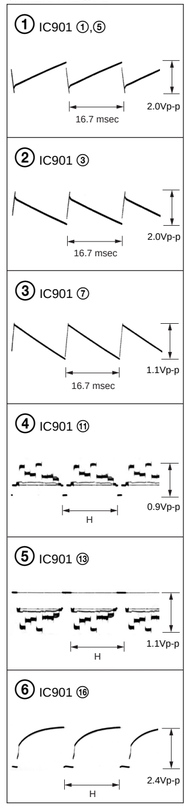

CF-56 (USER CONTROL) PRINTED WIRING BOARD
— Ref. No. CF-56 Board; 2,000 Series —

CF-56 BOARD

BH001	D-5	R016	B-4
		R020	B-5
C001	D-10	R022	A-5
C002	D-10	R023	A-5
C003	D-12	R025	C-9
		R026	B-6
CN001	B-11	R029	B-12
CN002	A-14	R031	E-9
CN003	E-11	R032	B-6
CN006	B-14	R036	B-12
CN007	C-12	R037	B-5
CN008	E-12	R038	E-9
CN009	C-14	R039	B-13
CN101	D-13	R040	B-5
		R041	E-9
D001	D-11	R049	C-10
D003	B-8	R050	C-10
D004	A-4	R051	C-10
D005	D-10	R052	C-10
D006	D-10	R053	E-9
D007	A-5		
D008	D-10	S001	A-3
D012	A-13	S003	B-3
D013	C-11	S004	C-8
		S006	A-5
Q001	D-12	S008	B-4
Q003	C-10	S010	B-6
Q005	C-10	S012	C-8
		S013	B-6
R003	C-10	S015	A-7
R005	A-4	S017	D-8
R006	A-12	S018	A-6
R007	B-9	S021	B-3
R008	B-4	S022	B-5
R009	C-9	S024	B-13
R013	A-4	S027	E-8
R015	C-9		

CF-56 BOARD(SIDE A)

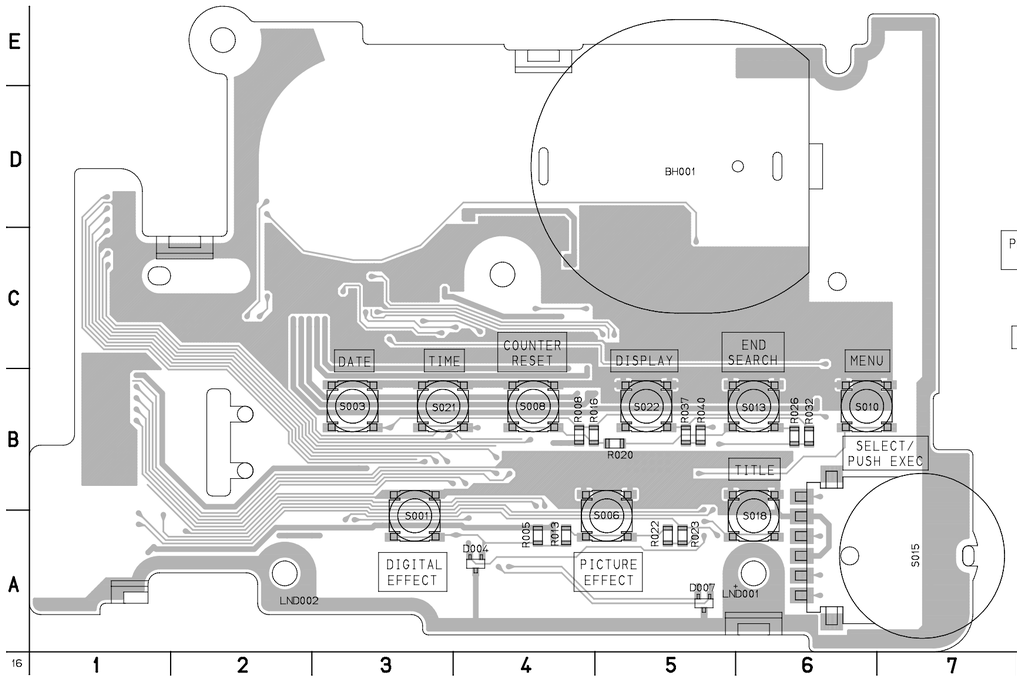

CF-56 BOARD(SIDE B)

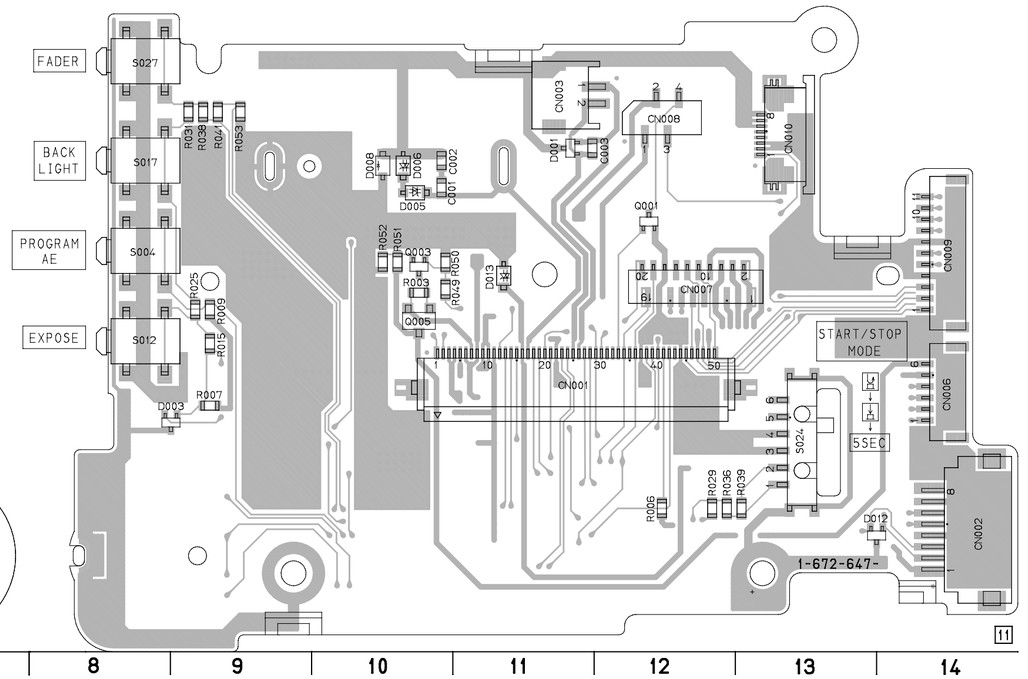

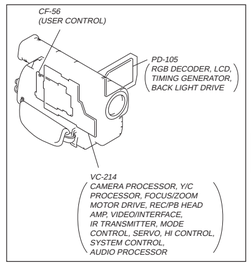
CF-56
(USER CONTROL)
PD-105
RGB DECODER, LCD, TIMING GENERATOR, BACK LIGHT DRIVE
VC-214
CAMERA PROCESSOR, Y/C PROCESSOR, FOCUS/ZOOM MOTOR DRIVE, REC/PB HEAD AMP, VIDEO/INTERFACE, IR TRANSMITTER, MODE CONTROL, SERVO, HI CONTROL, SYSTEM CONTROL, AUDIO PROCESSOR

For printed wiring boards
• Chip parts

Transistor Diode

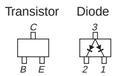

There are few cases that the part printed on this diagram isn't mounted in this model.

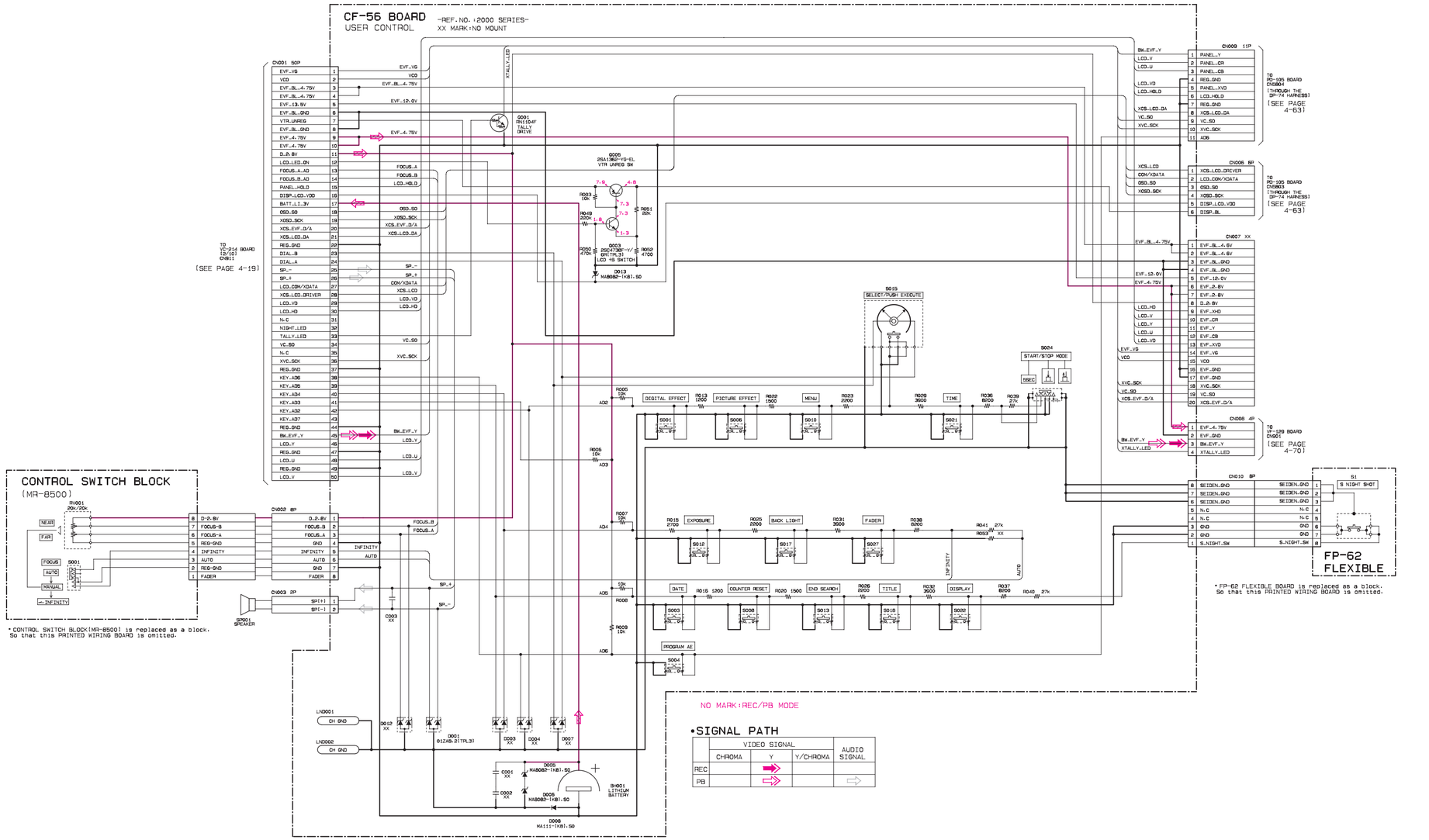
CF-56 BOARD
USER CONTROL
-REF.NO.:2000 SERIES-
XX MARK:NO MOUNT
CONTROL SWITCH BLOCK
(MR-8500)
FP-62
FLEXIBLE
NO MARK:REC/PB MODE
•SIGNAL PATH
VIDEO SIGNAL
AUDIO SIGNAL
CHROMA
Y
Y/CHROMA
REC
PB

For printed wiring boards

- This board is four-layer print board. However, the patterns of layers two to three have not been included in the diagram.
- Chip parts

Transistor

There are few cases that the part printed on this diagram isn't mounted in this model.

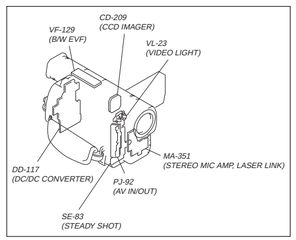

DD-117 BOARD

C801	E-8	D806	B-7	Q828	B-1	R852	D-6
C802	E-8	D809	B-2	Q829	A-1	R853	D-6
C803	D-7	D810	B-7	Q830	B-2	R854	D-6
C804	E-7	D812	B-7	Q831	A-2	R859	E-7
C805	D-7	D813	C-8	Q832	B-1	R864	E-7
C806	E-7	D814	F-9	Q833	A-7	R865	B-7
C807	D-7	D815	F-8	Q834	B-1	R866	B-7
C808	D-8	D816	E-8	Q835	A-3	R867	E-7
C809	D-7	D817	C-8	Q836	A-4	R868	A-6
C810	D-8	D818	D-6	Q837	A-2	R870	A-3
C811	D-7	D819	E-7	Q838	A-3	R871	A-3
C812	D-8	D820	B-2	Q839	A-4	R872	B-2
C813	D-7	D821	B-2	Q840	A-3	R873	A-1
C814	E-3	D822	F-8	Q841	A-2	R874	B-1
C815	C-8	D932	G-7	Q842	A-2	R875	A-6
C816	E-4	D933	F-8	Q843	A-2	R876	B-1
C817	E-4	D934	C-7	Q844	A-4	R877	A-3
C818	F-8	D935	F-8	Q845	A-3	R878	A-7
C819	C-7	D936	G-7	Q846	A-2	R879	B-1
C820	C-7	D938	E-4	Q847	A-2	R880	B-1
C821	C-7			Q848	A-3	R881	B-1
C822	E-4	FB931	D-4	Q849	A-3	R882	B-1
C823	C-8	FB932	E-4	Q850	A-3	R883	B-3
C824	C-7	FB933	D-4	Q851	E-8	R884	B-4
C825	B-7			Q852	B-6	R885	A-2
C826	D-4	IC801	D-7	Q853	B-7	R887	B-3
C827	E-7	IC802	E-7	Q854	B-7	R888	B-3
C828	E-6			Q855	B-7	R889	A-2
C829	E-6	L801	D-2	Q856	A-1	R890	A-2
C830	D-7	L802	D-3	Q932	G-8	R891	A-3
C831	E-7	L803	D-3	Q933	G-8	R892	A-3
C832	B-7	L804	E-4	Q934	G-8	R893	A-3
C833	B-7	L805	B-3			R894	A-2
C834	C-8	L806	C-3	R801	E-7	R895	A-1
C836	B-7	L807	C-2	R802	D-8	R896	A-4
C837	C-7	L808	B-3	R803	D-8	R897	A-4
C838	C-7	L809	C-3	R804	D-8	R898	A-2
C840	D-3	L810	B-8	R805	D-7	R899	A-2
C841	B-8	L811	B-8	R806	E-7	R900	A-2
C842	A-1	L812	B-8	R807	D-7	R901	A-1
C843	B-8	L813	B-8	R808	D-8	R902	A-1
C844	A-8	L814	A-7	R809	D-8	R903	A-3
C846	B-8	L815	A-7	R810	D-7	R904	A-3
C847	B-2	L816	B-8	R811	D-7	R905	A-3
C848	B-3	L817	A-8	R812	D-7	R906	A-3
C849	A-7	L818	A-7	R813	F-8	R907	A-3
C850	A-8	L819	A-8	R814	D-8	R908	B-7
C851	B-8	L820	D-3	R815	D-8	R910	B-7
C852	B-3	L821	A-1	R816	D-8	R911	B-7
C853	B-3	L822	A-6	R817	D-8	R912	B-7
C854	B-8			R818	D-7	R913	F-8
C855	A-7	LF801	D-2	R819	D-7	R914	D-7
C856	E-7			R820	D-8	R915	E-6
C857	A-7	PS801	F-8	R821	D-7	R916	A-2
C860	A-1	PS802	F-7	R822	E-8	R917	A-3
C861	A-2	PS803	F-7	R824	D-7	R918	A-6
C862	A-6	PS804	F-7	R825	D-8	R919	A-2
C863	B-1	PS805	F-7	R826	D-8	R920	A-2
C864	B-2	PS806	F-7	R827	E-8	R921	D-3
C865	A-1	PS807	F-8	R828	E-8	R922	D-2
C866	A-1			R829	D-7	R923	D-3
C867	A-2	Q801	F-8	R830	D-7	R924	B-1
C868	A-1	Q803	E-8	R831	F-8	R925	A-4
C869	A-1	Q804	F-8	R832	D-8	R926	C-9
C870	E-7	Q805	F-8	R833	D-7	R932	G-8
C871	B-6	Q806	C-6	R834	D-7	R933	F-2
C872	F-8	Q807	C-8	R835	D-8	R934	F-2
C873	A-6	Q808	C-8	R836	D-8	R935	F-2
C874	A-3	Q809	B-7	R837	D-7	R936	F-2
C875	A-7	Q810	C-7	R838	D-8	R937	F-2
C876	D-2	Q812	C-8	R839	C-7	R938	F-2
C877	D-2	Q813	C-7	R840	C-8	R939	F-2
C878	B-7	Q814	C-7	R841	C-8	R940	G-8
		Q815	C-7	R842	E-6	R941	G-8
CN801	C-1	Q817	C-7	R843	C-7	R942	E-4
CN931	C-9	Q819	D-4	R844	D-2	R943	G-7
CN933	A-9	Q820	E-7	R845	D-6	R944	B-1
CN934	D-4	Q823	B-7	R846	D-2	R945	B-1
CN935	G-3	Q824	E-7	R847	E-7		
CN936	F-1	Q826	A-3	R849	E-6	T801	B-2
		Q827	A-7	R850	E-6		

DD-117 (DC/DC CONVERTER) PRINTED WIRING BOARD

— Ref. No. DD-117 Board; 2,000 Series —

DD-117 BOARD(SIDE A)

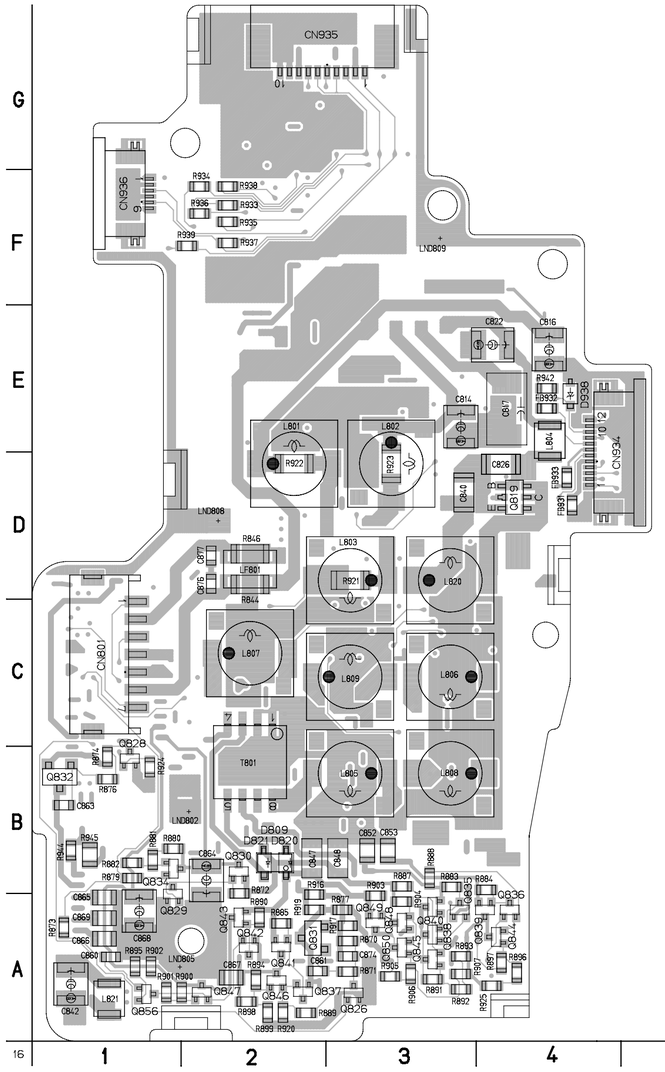

DD-117 BOARD(SIDE B)

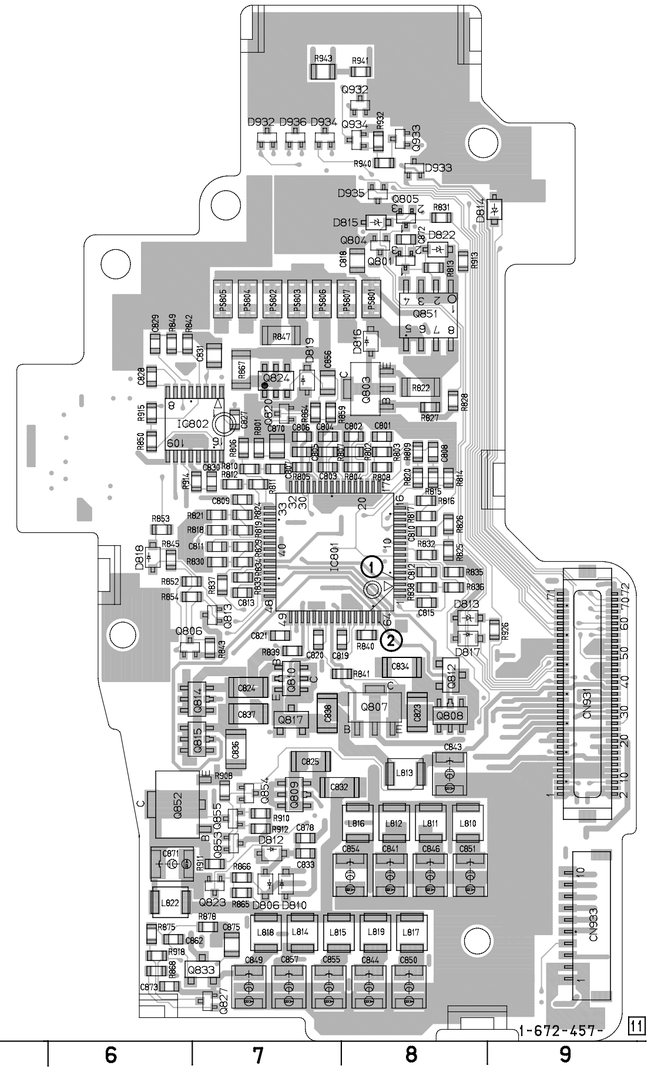

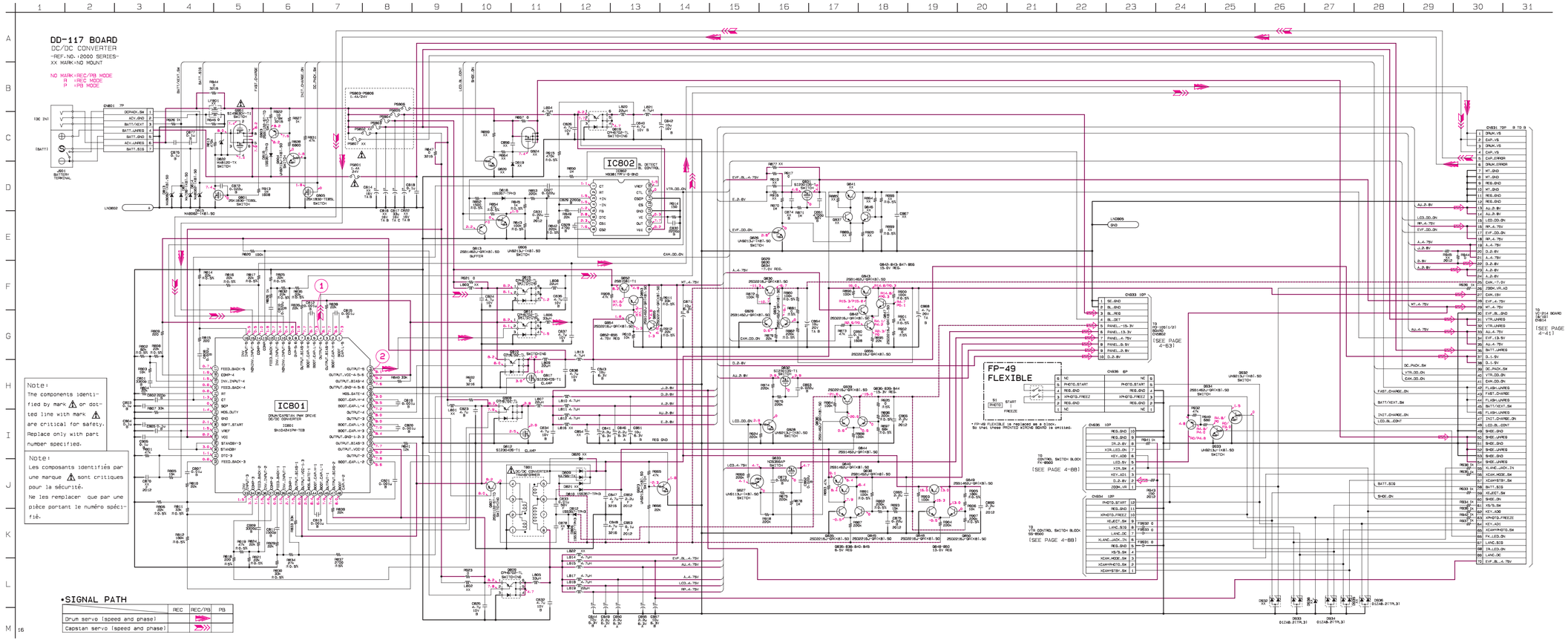

DD-117 BOARD
CAMERA REC/PB

① IC801 ④

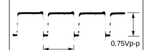

② IC801 ⑯

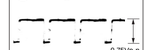

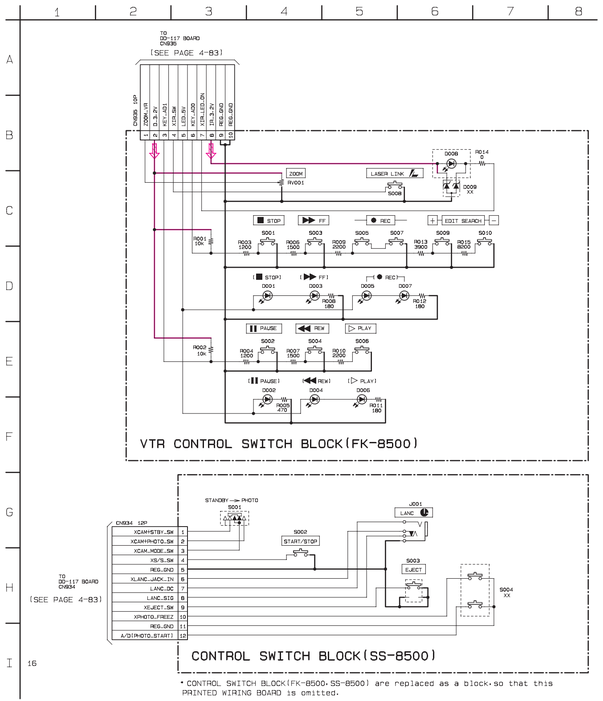

CONTROL SWITCH BLOCK
FK-8500/SS-8500

SECTION 5
ADJUSTMENTS

5-1. CAMERA SECTION ADJUSTMENT

1-1. PREPARATIONS BEFORE ADJUSTMENT (CAMERA SECTION)

1-1-1. List of Service Tools

• Oscilloscope • Color monitor • Vectorscope
• Regulated power supply • Digital voltmeter

Ref. No.	Name	Parts Code	Usage
J-1	Filter for color temperature correction (C14)	J-6080-058-A	Auto white balance adjustment/check White balance adjustment/check
J-2	ND filter 1.0	J-6080-808-A	White balance check
	ND filter 0.3	J-6080-818-A	White balance check
J-3	Pattern box PTB-450	J-6082-200-A	
J-4	Color chart for pattern box	J-6020-250-A	
J-5	Adjustment remote commander (RM-95 upgraded). (Note 2)	J-6082-053-B	
J-6	Siemens star chart	J-6080-875-A	For checking the flange back
J-7	Clear chart for pattern box	J-6080-621-A	
J-8	Multi CPC jig	J-6082-311-A	For adjusting the LCD block
J-9	CPC-7 jig	J-6082-382-A	For adjusting the video section
J-10	Power cord (Note 2)	J-6082-223-A	For connecting the battery terminal and DC power supply
J-11	AFM DEV jig	J-6082-312-A	For adjusting the deviation
J-12	Extension cable (16P, 0.5mm)	J-6082-357-A	For extension between the CD-209 board (CN1401) and the VC-214 board (CN501)
J-13	Extension cable (70P, 0.5mm)	J-6082-439-A	For extension between the DD-117 board (CN931) and the VC-214 board (CN914)
J-14	IR receiver jig	J-6082-383-A	For adjusting the IR transmitter

Note 1: If the micro processor IC in the adjustment remote commander is not the new micro processor (UPD7503G-C56-12), the pages cannot be switched. In this case, replace with the new micro processor (8-759-148-35).

Note 2: Connect the adjustment remote commander to the LANC jack, and set to HOLD switch to the “ADJ” side.

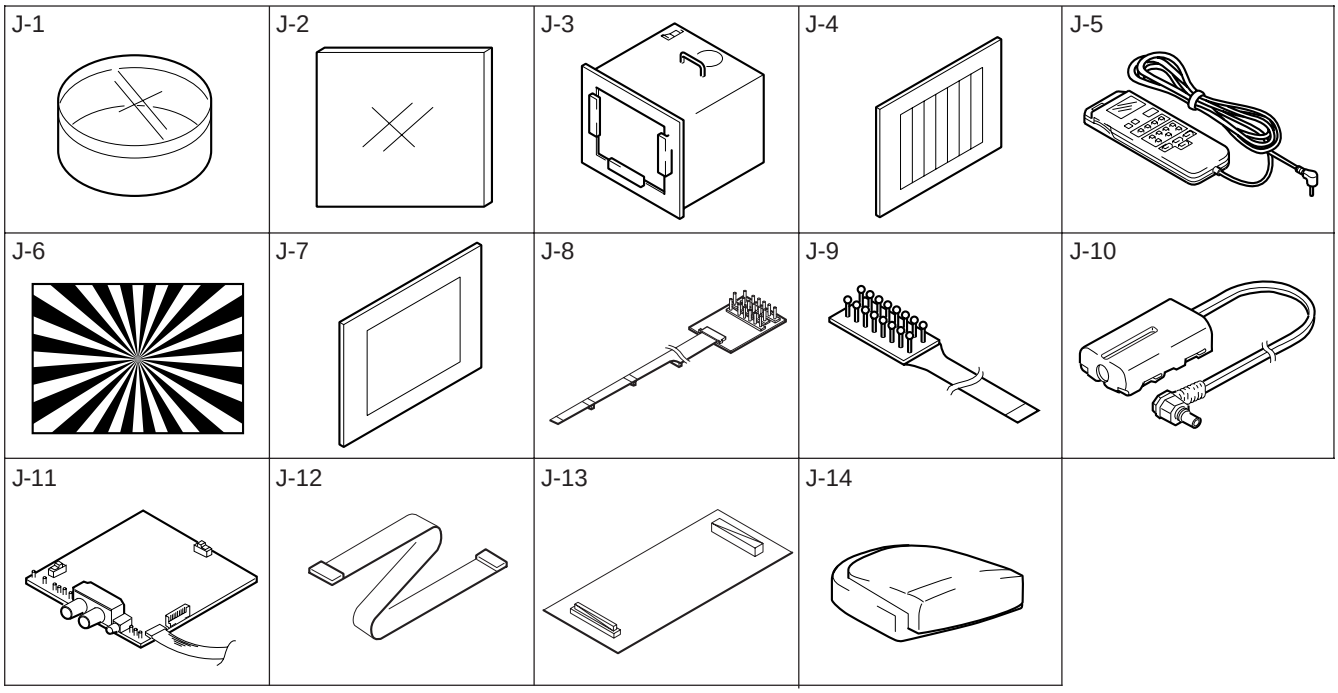

Fig. 5-1-1.

1-1-2. Adjusting items when replacing main parts

When replacing main parts, adjust the items indicated by ● in the following table.

Adjustment Section	Adjusting item	Replacing parts																						
		Lens device	CD-209 board IC1401 (CCD imager)	SE-83 board SE451 (Pitch sensor)	SE-83 board SE452 (Yaw sensor)	VC-214 board IC202 (Y, C process)	VC-214 board IC151 (Y, C IN/OUT)	VC-214 board IC001 (REC/PB AMP)	VC-214 board IC751 (IR transmitter)	VC-214 board IC301 (AFM process)	VC-214 board IC501 (Timing generator)	VC-214 board IC502 (S/H, AGC)	VC-214 board IC401 (EEPROM)	Mechanism deck M901 (Drum assembly)	Mechanism deck M902 (Capstan motor)	VF-129 board IC901 (CRT driver)	VF-129 board T901 (FBT)	EVF block V901 (Picture tube)	PD-105 board IC5502 (LCD driver)	PD-105 board IC5601 (Timing generator)	LCD block ND901 (Fluorescent tube)	LCD block LCD901 (LCD panel)
	Initialization of D, E, F page data												●										
Camera	HALL adj.	●											●										
Camera	Flange back adj.	●	●										●										
Camera	AGC gain calibration adj.		●									●	●										
Camera	Color reproduction adj.		●									●	●										
Camera	IRIS IN/OUT adj.	●	●									●	●										
Camera	MAX GAIN adj.		●									●	●										
Camera	Auto white balance standard data input		●									●	●										
Camera	Auto white balance adj.		●									●	●										
Camera	Angular velocity sensor sensitivity preset and steady shot check.			●	●								●										
EVF	Centering adj.															●	●	●					
EVF	Focus adj.															●	●	●					
EVF	Aberration adj.															●	●	●					
EVF	Horizontal amplitude adj.															●	●	●					
EVF	Vertical amplitude adj.															●	●	●					
EVF	Brightness adj.															●	●	●					
LCD	LCD initial data input												●										
LCD	VCO adj.												●							●			
LCD	D range adj.												●						●				
LCD	Bright adj.												●						●				
LCD	Contrast adj.												●						●				
LCD	V-COM level adj.												●						●				
LCD	Color adj.												●						●				
LCD	V-COM adj.												●						●				●
LCD	White balance adj.												●						●		●		●
System Control	Battery end adj.												●										
Servo	CAP FG offset adj.												●		●								
Servo	Switching position adj.												●	●									
Video	28MHz origin oscillation adj.										●		●										
Video	AFC f_0 adj.					●							●										
Video	Filter f_0 adj.						●						●										
Video	Y OUT level adj.					●	●						●										
Video	C OUT level adj.					●	●						●										
Video	RP filter f_0 adj.							●					●										
Video	REC Y current adj.					●		●					●										
Video	REC L level adj.					●		●					●										
Video	REC C current adj.					●		●					●										
IR	IR video carrier frequency adj.						●		●				●										
IR	IR video deviation adj.						●		●				●										
IR	IR audio deviation adj.								●				●										
Audio	1.5MHz deviation adj.									●			●										
Audio	1.7MHz deviation adj.									●			●										
Audio	BPF f_0 adj.									●			●										
Mechanism	Tape path adj.													●	●								

Table. 5-1-1.

1-1-3. Preparations

Note 1: For details of how remove the cabinet and boards, refer to "2. DISASSEMBLY".

Note 2: When performing only the adjustments, the lens block and boards need not be disassembled.

1) Connect the equipment for adjustments according to Fig. 5-1-3.
2) By setting the "Forced Camera Power ON mode", the camera power can be turned ON even if the front panel block (MA-351 board, power switch, microphone unit) has been removed. When removing the front panel block disconnect the following connector.
   1. VC-214 board CN903 (20P 0.5mm)

Note 3: As removing the cabinet (R) (removing the VC-214 board CN911) means removing the lithium 3V power supply (CF-56 board BH001), data such as date, time, user-set menus will be lost. After completing adjustments, reset these data. If the cabinet (R) has been removed, the self-diagnosis data, data on history of use (total drum rotation time etc.) will be lost. Before removing, note down the self-diagnosis data and data on history use (data of page: 2, address: A2 to AA). (Refer to "SELF-DIAGNOSIS FUNCTION" for the self-diagnosis data, and to "5-4. Service Mode" for the data on the history use.)

Note 4: Setting the "Forced Camera Power ON" Mode
1) Select page: 0, address: 01, and set data: 01.
2) Select page: D, address: 10, set data: 01, and press the PAUSE button of the adjustment remote commander.
The above procedure will enable the camera power to be turned on with the front panel block removed. After completing adjustments, be sure to exit the "Forced Camera Power ON Mode".

Note 5: Exiting the "Forced Camera Power ON" Mode
1) Select page: 0, address: 01, and set data: 01.
2) Select page: D, address: 10, set data: 00, and press the PAUSE button of the adjustment remote commander.
3) Select page: 0, address: 01, and set data: 00.

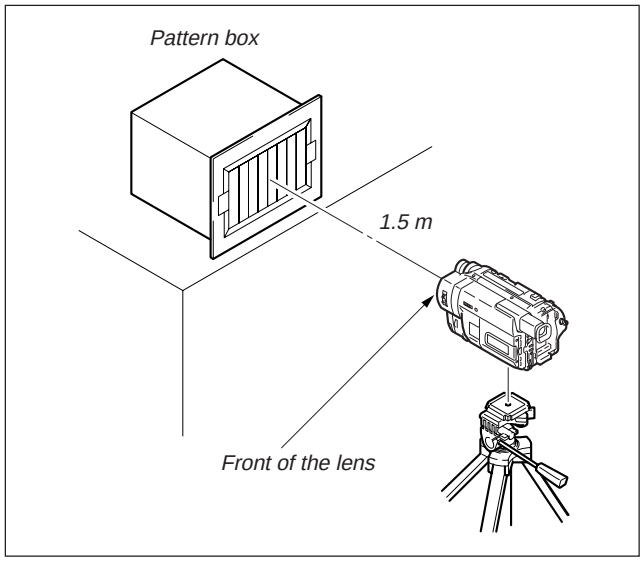

Fig. 5-1-2.

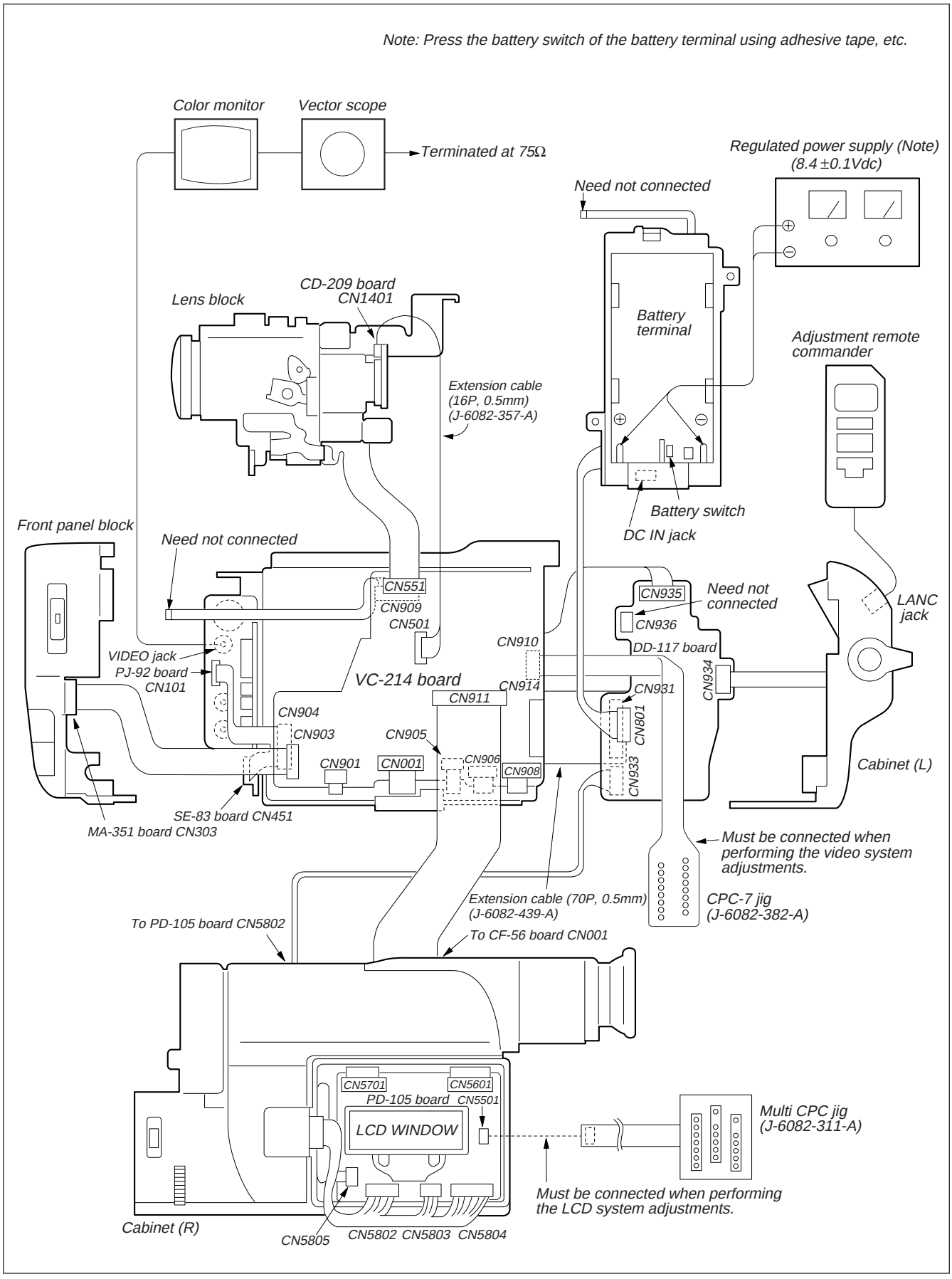
Note: Press the battery switch of the battery terminal using adhesive tape, etc.
Color monitor
Vector scope
Terminated at 75Ω
Regulated power supply (Note)
(8.4 ±0.1Vdc)
Need not connected
Lens block
CD-209 board
CN1401
Battery terminal
Adjustment remote commander
Extension cable
(16P, 0.5mm)
(J-6082-357-A)
Battery switch
DC IN jack
Front panel block
Need not connected
CN551
CN909
CN501
CN935
Need not connected
CN936
LANC jack
CN910
DD-117 board
VIDEO jack
PJ-92 board
CN101
VC-214 board
CN914
CN931
CN934
CN911
CN904
CN903
CN905
CN801
CN901
CN001
CN906
CN908
CN933
Cabinet (L)
SE-83 board CN451
MA-351 board CN303
Must be connected when performing the video system adjustments.
Extension cable (70P, 0.5mm)
(J-6082-439-A)
CPC-7 jig
(J-6082-382-A)
To PD-105 board CN5802
To CF-56 board CN001
CN5701
CN5601
PD-105 board
CN5501
LCD WINDOW
Multi CPC jig
(J-6082-311-A)
Must be connected when performing the LCD system adjustments.
Cabinet (R)
CN5805
CN5802
CN5803
CN5804

Fig. 5-1-3.

1-1-4. Precaution

1. Setting the Switch

Unless otherwise specified, set the switches as follows and perform adjustments without loading cassette.

1. POWER switch (MA-351 board) ..... CAMERA
2. NIGHT SHOT switch (Lens block) ..... OFF
3. VIDEO LIGHT switch (MA-351 board) ..... OFF
4. DEMO MODE (Menu display) ..... OFF
5. DIGITAL ZOOM (Menu display) ..... OFF
6. STEADY SHOT (Menu display) ..... OFF
7. DISPLAY (Menu display) ..... V-OUT/LCD
8. DISPLAY (CF-56 board) ..... ON
9. FOCUS switch (MR-8500 block) ..... MANUAL
10. PROGRAM AE (CF-56 board) ..... Auto
11. BACK LIGHT (CF-56 board) ..... OFF
12. PICTURE EFFECT (CF-56 board) ..... OFF
13. DIGITAL EFFECT (CF-56 board) ..... OFF
14. 16 : 9 WIDE (MENU display) ..... OFF

2. Order of Adjustments

Basically carry out adjustments in the order given.

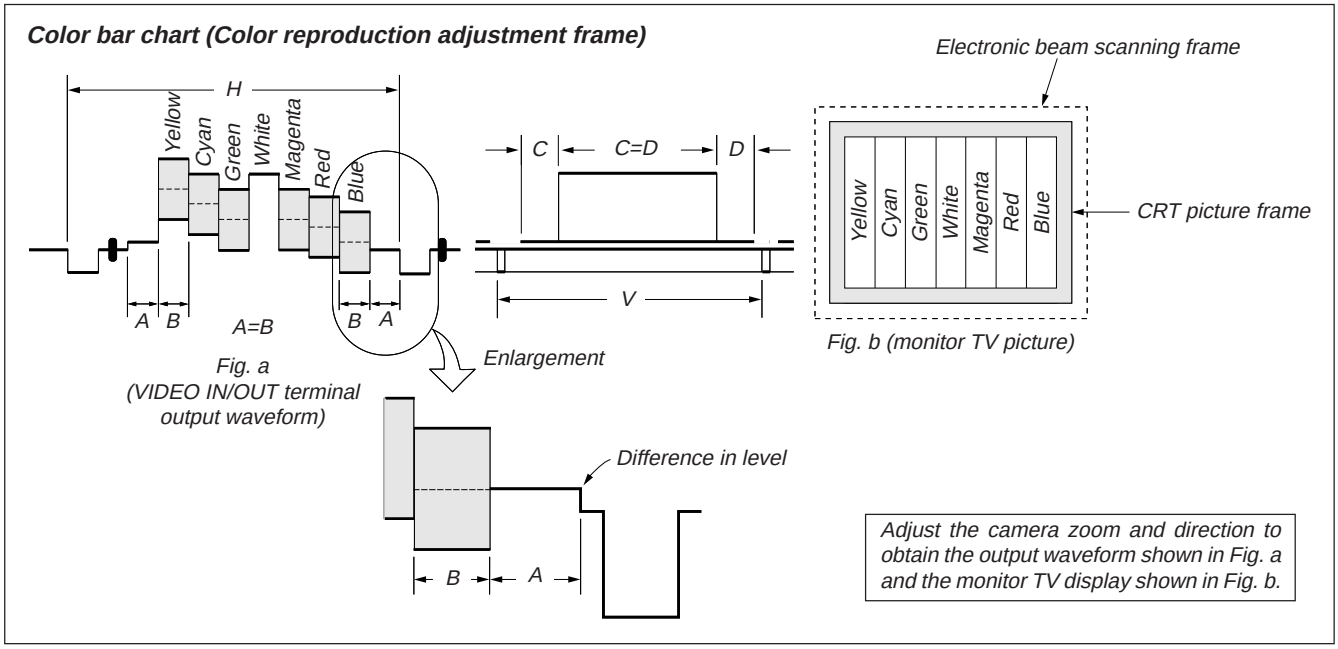

Fig. 5-1-4.

3. Subjects

1) Color bar chart (Color reproduction adjustment frame)
   When performing adjustments using the color bar chart, adjust the picture frame as shown in Fig. 5-1-4. (Color reproduction adjustment frame)
2) Clear chart (Color reproduction adjustment frame)
   Remove the color bar chart from the pattern box and insert a clear chart in its place. (Do not perform zoom operations during this time.)
3) Flange back adjustment chart
   Make the chart shown in Fig. 5-1-5. using A0 size (1189mm × 841mm) black and white vellum paper.

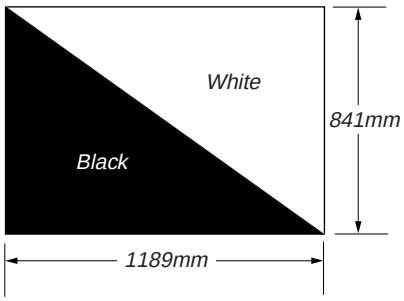

Fig. 5-1-5.

Note: Use matte vellum paper bigger than A0, and make sure the edges of the black and white paper joined together are not rough.

1-2. INITIALIZATION OF D, E, F PAGE DATA

1. Initializing the D,E,F Page Data

Note: If the D,E,F page data has been initialized, "Modification of D, E, F Page Data" and all adjustments need to be performed again.

Adjusting page	D
Adjusting Address	00 to 6F
Adjusting page	F
Adjusting Address	00 to FF
Adjusting page	E
Adjusting Address	00 to FF

Initializing Method:

1) Select page: 0, address: 01, and set data: 01.
2) Select page: 6, address: 00, and set data: 55.
3) Select page: 6, address: 01, set data: 55, and press the PAUSE button of the adjustment remote commander.
4) Select page: 6, address: 02, and check that the data is 01.
5) Select page: 2, address: 00, and set data: 29.
6) Select page: 2, address: 01, set data: 29, and press the PAUSE button of the adjustment remote commander.
7) Perform "Modification of D,E,F Page Data".

2. Modification of D, E, F Page Data

If the D, E, F page data has been initialized, change the data of the "Fixed data-2" address shown in the following tables by manual input.

Modifying Method:

1) Before changing the data, select page: 0, address: 01, and set data: 01.
2) New data for changing are not shown in the tables because they are different in destination. When changing the data, copy the data built in the same model.
   Note: If copy the data built in the different model, the camcorder may not operate.
3) When changing the data, press the PAUSE button of the adjustment remote commander each time when setting new data to write the data in the non-volatile memory.
4) Check that the data of adjustment addresses is the initial value. If not, change the data to the initial value.
5) After completing "Modification of D, E, F Page Data", select page: 0, address: 01, and set data: 00. Also perform all adjustments.

3. D Page Table

Note : Fixed data-1 : Initialized data. (Refer to "1. Initializing the D,E,F Page Data".)
Fixed data-2 : Modified data. (Refer to "2. Modification of D, E, F Page Data".)

Address	Initial value	Remark
00 to 0F		
10	00	Test mode
11		Fixed data-1
12		(Initialized data)
13		Fixed data-2
14		(Modified data, copy the data built in the same model.)
15		Fixed data-1
16		(Initialized data)
17		
18		
19		
1A		
1B		
1C		
1D		
1E		Fixed data-2
1F		Fixed data-1
20		(Initialized data)
21		
22		
23		
24		
25		
26		
27		
28		
29		
2A		
2B		Fixed data-2
2C		Fixed data-1
2D		
2E		Fixed data-2
2F		(Modified data, copy the data built in the same model.)
30	88	Battery end adj.
31	8D	
32	A8	
33	BD	
34	C8	
35		Fixed data-1
36		Fixed data-2
37		(Modified data, copy the data built in the same model.)
38		
39		
3A		
3B		
3C		
3D		
3E		Fixed data-1
3F		(Initialized data)

Address	Initial value / Remark
40	Fixed data-2
41	
42	Fixed data-1
43	Fixed data-2
44	Fixed data-1
45	(Initialized data)
46	
47	
48	
49	Fixed data-2
4A	
4B	
4C	Fixed data-1
4D	Fixed data-2
4E	Fixed data-1
4F	(Initialized data)
50	
51	
52	
53	
54	
55	
56	
57	
58	
59	
5A	
5B	
5C	
5D	
5E	
5F	
60	
61	
62	
63	
64	
65	
66	
67	
68	
69	
6A	
6B	
6C	
6D	
6E	
6F	

Table. 5-1-2.

4. F Page table

Note : Fixed data-1 : Initialized data. (Refer to “1. Initializing the D,E,F Page Data”.)
Fixed data-2 : Modified data. (Refer to “2. Modification of D, E, F Page Data”.)

Address	Initial value	Remark
00 to 0F		
10	00	Emergency memory address
11	00	
12	00	
13	00	
14	00	
15	00	
16	00	
17	00	
18	00	
19	00	
1A	00	
1B	00	
1C		Fixed data-1
1D		(Initialized data)
1E		
1F		
20		
21		
22		
23		
24		
25		
26		
27		
28		
29		
2A		
2B		
2C		
2D		
2E	4B	AGC gain calibration adj.
2F	80	
30	AC	
31	80	
32	2B	AWB standard data input
33	80	
34	65	
35	80	
36		Fixed data-1
37		(Initialized data)
38	1C	Flange back adj.
39	03	
3A	25	
3B	24	
3C	11	
3D	05	
3E	0A	Switching position adj.
3F	00	
40	8C	28MHz origin osc. adj.
41		Fixed data-1
42		(Initialized data)

Address	Initial value	Remark
43		Fixed data-1
44		(Initialized data)
45		
46		
47	84	HALL adj.
48	68	
49	08	Max gain adj.
4A		Fixed data-1
4B		(Initialized data)
4C		
4D		
4E	33	Color reproduction adj.
4F		Fixed data-1
50	34	Color reproduction adj.
51		Fixed data-1
52		(Initialized data)
53		
54	8D	Auto white balance adj.
55	87	
56	41	IRIS IN/OUT adj.
57	49	
58		Fixed data-1
59		(Initialized data)
5A	2A	Flange back adj.
5B	00	
5C	19	
5D	00	
5E	37	
5F	4B	Angular velocity sensor sensitivity
60	54	preset and steady shot check.
61	83	CAP FG offset adj.
62	7A	1.5MHz deviation adj.
63	8D	1.7MHz deviation adj.
64	7A	BPF f_0 adj.
65		Fixed data-1
66	41	IR video deviation adj.
67	33	IR audio deviation adj.
68	C7	IR video carrier freq. adj.
69	6B	Y OUT level adj.
6A	40	AFC f_0 adj.
6B	9A	C OUT level adj.
6C		Fixed data-1
6D	7B	Filter f_0 adj.
6E	60	RP filter f_0 adj.
6F		Fixed data-1
70		(Initialized data)
71		
72		
73	60	REC Y current adj.
74	60	
75	60	
76	60	
77	6D	
78	7C	
79	6D	
7A	7C	

Address	Initial value	Remark
7B	B0	REC L level adj.
7C	B0	
7D	B0	
7E	B0	
7F	78	
80	78	
81	78	
82	78	
83	A4	
84	A4	
85	80	REC C current adj.
86		Fixed data-1
87		(Initialized data)
88		
89		
8A		
8B		
8C		
8D		
8E		
8F		
90		
91		
92		
93		
94		Fixed data-2
95		Fixed data-1
96		(Initialized data)
97		
98		
99		
9A		
9B		
9C		
9D		
9E		
9F		
A0		
A1		
A2		
A3		
A4		
A5		
A6		
A7		
A8		
A9		
AA		
AB		
AC		
AD		
AE		
AF		
B0		
B1		
B2		

Address	Initial value	Remark
B3		Fixed data-1
B4		(Initialized data)
B5		
B6		
B7		
B8		
B9		
BA		
BB		
BC		
BD		
BE		
BF		
C0		
C1		
C2		
C3		
C4		
C5		
C6		
C7		
C8		
C9		
CA		
CB		
CC		
CD		
CE		
CF		
D0		
D1		
D2		
D3		
D4		
D5		
D6		
D7		
D8		
D9		
DA		
DB		
DC		
DD		
DE		Fixed data-2
DF		Fixed data-1
E0		(Initialized data)
E1		
E2		
E3		
E4		
E5		
E6		
E7		
E8		
E9		
EA		

Address	Initial value	Remark
EB		Fixed data-1
EC		(Initialized data)
ED		
EE		
EF		
F0		
F1		
F2		
F3		
F4		
F5		
F6		Fixed data-2
F7		Fixed data-1
F8	00	Flange back adj.
F9	00	
FA	02	
FB	FD	Color reproduction adj.
FC	F4	
FD		Fixed data-1
FE		(Initialized data)
FF		

Table. 5-1-3.

5. E Page Table

Note : Fixed data-1 : Initialized data. (Refer to "1. Initializing the D,E,F Page Data".)
Fixed data-2 : Modified data. (Refer to "2. Modification of D, E, F Page Data".)

Address	Initial value	Remark
00		Fixed data-1
01		(Initialized data)
02		
03		
04		
05		
06		
07		
08		
09		
0A		
0B		
0C		
0D		
0E		
0F		
10		
11		
12		
13		
14		
15		
16		
17		
18		
19		
1A		
1B		
1C		
1D		
1E		
1F		
20		
21		
22		
23		
24		
25		
26		
27		
28		
29		
2A		
2B		
2C		
2D		
2E		
2F		Fixed data-2
30		(Modified data, copy the data built in the same model.)
31		Fixed data-1
32		Fixed data-2
33		Fixed data-1
34		(Initialized data)
35		
36		
37		
38		
39		
3A		
3B		
3C		
3D		
3E		
3F		
40		
41		
42		
43		
44		
45		
46		
47		
48		
49		
4A		
4B		
4C		
4D		
4E		Fixed data-2
4F		Fixed data-1
50		(Initialized data)
51		
52		
53		
54		
55		
56		
57		
58		
59		
5A		
5B		
5C		
5D		
5E		
5F		
60		
61		
62		
63		
64		
65		
66		
67		
68		
69		
6A		

Address	Initial value	Remark
6B		Fixed data-1
6C		(Initialized data)
6D		
6E		
6F		
70		
71		
72		
73		
74		
75		
76		
77		
78		
79		
7A		
7B		
7C		
7D		
7E		
7F		
80		
81		
82		
83		
84		
85		
86		
87		
88		
89		
8A		
8B		
8C		
8D		
8E		
8F		
90		
91		
92		
93		
94		
95		
96		
97		
98		
99		
9A		
9B		
9C		
9D		
9E		
9F		
A0		
A1		
A2		

Address	Initial value	Remark
A3		Fixed data-1
A4		(Initialized data)
A5		
A6		
A7		
A8		
A9		
AA		
AB		
AC		
AD		Fixed data-2
AE		(Modified data, copy the data built in the same model.)
AF		Fixed data-1
B0		(Initialized data)
B1		
B2		
B3		
B4		
B5		
B6		
B7		
B8		
B9		
BA		
BB		
BC		
BD		
BE		
BF		
C0		
C1		
C2		Fixed data-2
C3		(Modified data, copy the data built in the same model.)
C4		
C5		Fixed data-1
C6		(Initialized data)
C7		
C8		
C9		
CA		
CB		
CC		
CD		
CE		Fixed data-2
CF		Fixed data-1
D0		(Initialized data)
D1	84	Bright adj. (LCD)
D2	77	Color adj. (LCD)
D3	98	White balance adj. (LCD)
D4	7B	
D5	DC	Contrast adj. (LCD)
D6	80	D range adj. (LCD)
D7	89	V-COM level adj. (LCD)
D8	70	VCO adj. (LCD)
D9	80	V-COM adj. (LCD)

Address	Initial value	Remark
DA		Fixed data-1
DB		(Initialized data)
DC		
DD		
DE		
DF		
E0		
E1		
E2		
E3		
E4		
E5		
E6		
E7		
E8		
E9		
EA		
EB		
EC		
ED		
EE		
EF		
F0		
F1		
F2		
F3		
F4		
F5		
F6		
F7		
F8		
F9		
FA		
FB		
FC		
FD		Fixed data-2
FE		(Modified data, copy the data built in the same model.)
FF		Fixed data-1

Table. 5-1-4.

1-3. CAMERA SYSTEM ADJUSTMENTS

Before perform the camera system adjustments, Check that the specified value of "28MHz Origin Oscillation Adjustment", "Y OUT level Adjustment" and "C OUT level Adjustment" of "VIDEO SYSTEM ADJUSTMENT" are satisfied.

1. HALL Adjustment

For detecting the position of the lens iris, adjust the hall AMP gain and offset.

Subject	Not required
Measurement Point	Display data of page 1
Measuring Instrument	Adjustment remote commander
Adjustment Page	F
Adjustment Address	47, 48
Specified Value	86 to 8A during IRIS OPEN 15 to 19 during IRIS CLOSE

Note : Displayed data of page 1 of the adjustment remote commander.

1 : 00 : XX
└── Display data

Adjusting method:

1) Select page: 0, address: 01, and set data: 01.
2) Select page: 6, address: 01, set data: 6D, and press the PAUSE button of the adjustment remote commander. (The HALL adjustment is performed and the adjustment data is stored in page: F, address: 47 and 48.)
3) Select page: 6, address: 02, and check that the data is "01".
4) Select page: 6, address: 01, set data: 00, and press the PAUSE button.

Checking method:

1) Select page: 0, address: 03, and set data: 03.
2) Select page: 6, address: 01, set data: 01, and press the PAUSE button.
3) Select page: 1, and check that the display data (Note) during IRIS OPEN satisfies the specified value.
4) Select page: 6, address: 01, set data: 03, and press the PAUSE button.
5) Select page: 1, and check that the display data during IRIS CLOSE satisfies the specified value.

Processing after Completing Adjustments

1) Select page: 6, address: 01, set data: 00, and press the PAUSE button.
2) Select page: 0, address: 01, and set data: 00.
3) Select page: 0, address: 03, and set data: 00.

2. Flange Back Adjustment

The inner focus lens flange back adjustment is carried out automatically. In whichever case, the focus will be deviated during auto focusing/manual focusing.

2-1. Flange Back Adjustment(1)

Subject	Flange back adjustment chart (2.0 m from the front of the lens) (Luminance: 350 ± 50 lux)
Measurement Point	Check operation on TV monitor
Measuring Instrument	
Adjustment Page	F
Adjustment Address	38 to 3D, 5A to 5E, F8 to FA

Switch setting:

1) NIGHT SHOT ..... OFF
2) DIGITAL ZOOM (Menu display) ..... OFF
3) STEADY SHOT (Menu display) ..... OFF
4) VIDEO LIGHT ..... OFF

Adjusting method:

1) Check that at both the zoom lens TELE end and WIDE end, the center of the chart for the flange back adjustment and center of the exposure screen coincide.
2) Select page: 0, address: 01, and set data: 01.
3) Check that the data of page: F, address:38 to 3D, 5A to 5E, F8 to FA is the initial value (See table below).

Address	Data	Address	Data
38	1C	5B	00
39	03	5C	19
3A	25	5D	10
3B	24	5E	37
3C	11	F8	00
3D	05	F9	00
5A	2A	FA	02

4) Select page: 6, address: 02, and check that the data is "00".
5) Select page: 6, address: 01, set data: 13, and press the PAUSE button of the adjustment remote commander.
6) Select page: 6, address: 01, set data: 15, and press the PAUSE button.
   (The adjustment data will be automatically input to page: F, addresses:38 to 3D, 5A to 5E, F8 to FA.)
7) Select page: 6, address: 02, and check that the data is "01".

Processing after Completing Adjustments

1) Turn OFF the main power supply (8.4V).
2) Perform "Flange Back Adjustment (2)".

2-2. Flange Back Adjustment (2)

Perform this adjustment after performing "Flange Back Adjustment (1)".

Subject	Subject more than 500m away (Subjects with clear contrast such as buildings, etc.)
Measurement Point	Check operation on TV monitor
Measuring Instrument	
Adjustment Page	F
Adjustment Address	38 to 3D, 5A to 5E, F8 to FA

Switch setting:

1) NIGHT SHOT ..... OFF
2) DIGITAL ZOOM (Menu display) ..... OFF
3) STEADY SHOT (Menu display) ..... OFF
4) VIDEO LIGHT ..... OFF

Adjusting method:

1) Set the zoom lens to the TELE end and expose a subject that is more than 500 m away (subject with clear contrast such as building, etc.). (Nearby subjects less than 500 m away should not be in the screen.)
2) Select page: 0, address: 01, and set data: 01.
3) Select page: 6, address: 02, and check that the data is "00".
4) Select page: 6, address: 01, set data: 13, and press the PAUSE button of the adjustment remote commander.
5) Place a ND filter on the lens so that the optimum image is obtain.
6) Select page: 6, address: 01, set data: 29, and press the PAUSE button.
   (The adjustment data will be automatically input to page: F, addresses:38 to 3D, 5A to 5E, F8 to FA.)
7) Select page: 6, address: 02, and check that the data is "01".

Processing after Completing Adjustments

1) Select page: 0, address: 01, and set data: 00.
2) Turn OFF the main power supply (8.4V).
3) Perform "Flange Back Check".

3. Flange Back Check

Subject	Siemens star (2.0 m from the front of the lens) (Luminance : approx. 200 lux)
Measurement Point	Check operation on TV monitor
Measuring Instrument	
Specified Value	Focused at the TELE end and WIDE end.

Switch setting:

1) NIGHT SHOT ..... OFF
2) DIGITAL ZOOM (Menu display) ..... OFF
3) STEADY SHOT (Menu display) ..... OFF
4) VIDEO LIGHT ..... OFF

Checking method:

1) Place the Siemens star 2.0m from the front of the lens.
2) To open the IRIS, decrease the luminous intensity to the Siemens star up to a point before noise appear on the image.
3) Shoot the Siemens star with the zoom TELE end.
4) Turn on the auto focus.
5) Check that the lens is focused (Note).
6) Select page: 6, address: 21, and set data: 10.
7) Shoot the Siemens star with the zoom WIDE end.
8) Observe the TV monitor and check that the lens is focused.

Note: When the auto focus is ON, the lens can be checked if it is focused or not by observing the data on the page 1 of the adjustment remote commander.
1) Select page: 0, address: 03, and set data: 0F.
2) Page 1 shows the state of the focus.

1 : 00 : XX
- Odd: Focused
- Even: Unfocused

Processing after Completing Adjustments

1) Select page: 6, address: 21, and set data: 00.
2) Select page: 0, address: 03, and set data: 00.

4. Picture Frame Setting

Subject	Color bar chart (Color reproduction adjustment frame) (1.5m from the front of the lens)
Measurement Point	Video output terminal
Measuring Instrument	Oscilloscope and TV monitor
Specified Value	A=B, C=D, E=F, t=0 ± 0.1msec

Switch setting:

1) NIGHT SHOT ..... OFF
2) DIGITAL ZOOM (Menu display) ..... OFF
3) STEADY SHOT (Menu display) ..... OFF
4) VIDEO LIGHT ..... OFF

Setting method:

1) Adjust the zoom and the camera direction, and set to the specified position.
2) Mark the position of the picture frame on the monitor display, and adjust the picture frame to this position in following adjustments using “Color reproduction adjustment frame”.

Check on the oscilloscope

1. Horizontal period

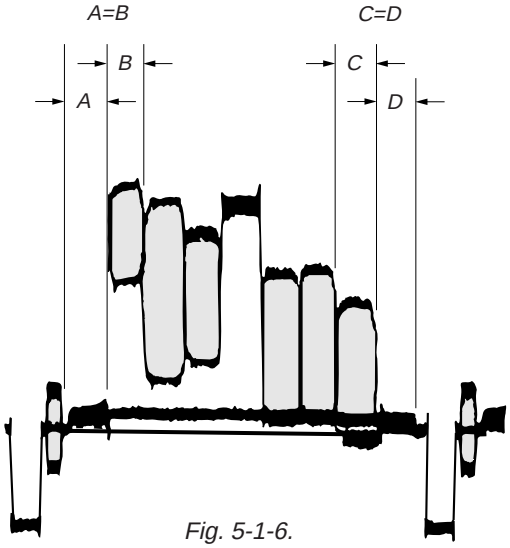

Fig. 5-1-6.

2. Vertical period

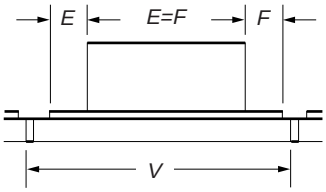

Fig. 5-1-7.

Check on the monitor TV (Underscanned mode)

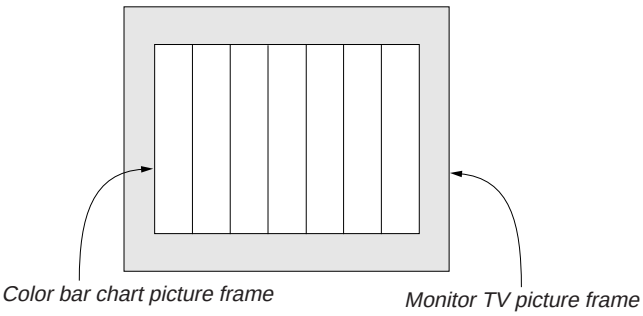

Fig. 5-1-8.

5. AGC Gain Calibration Adjustment

Subject	Clear chart (Color reproduction adjustment frame)
Adjustment Page	F
Adjustment Address	2E, 2F, 30, 31

Switch setting:

1) NIGHT SHOT ..... OFF
2) DIGITAL ZOOM (Menu display) ..... OFF
3) STEADY SHOT (Menu display) ..... OFF
4) VIDEO LIGHT ..... OFF

Adjusting method:

1) Select page: 0, address: 01, and set data: 01.
2) Select page: 6, address: 01, set data: 71, and press the PAUSE button of the adjusting remote commander.
   (When the adjustment data is take in, the data will be automatically input to page: F, address: 2E to 31.)
3) Select page: 6, address: 02, and check that the data is “01”.

Processing after Completing Adjustments

1) Select page: 6, address: 01, and set data: 00, and press the PAUSE button of the adjusting remote commander.
2) Select page: 0, address: 01, and set data: 00.

6. Color Reproduction Adjustment

Adjust the color Separation matrix coefficient so that proper color reproduction is produced.

Subject	Color bar chart (Color reproduction adjustment frame)
Measurement Point	Video output terminal
Measuring Instrument	Vectorscope
Adjustment Page	F
Adjustment Address	4E, 50, FB, FC
Specified Value	All color luminance points should settle within each color reproduction frame.

Switch setting:

1) NIGHT SHOT ..... OFF
2) DIGITAL ZOOM (Menu display) ..... OFF
3) STEADY SHOT (Menu display) ..... OFF
4) VIDEO LIGHT ..... OFF

Adjusting method:

1) Select page: 0, address: 01, and set data: 01.
2) Select page: F, address: E1, set data: 1B, and press the PAUSE button of the adjustment remote commander.
3) Select page: F, address: 27, set data: 3F, and press the PAUSE button.
4) Select page: 6, address: 01, set data: 3D, and press the PAUSE button.
5) Adjust the GAIN and PHASE of the vectorscope, and adjust the burst luminance point to the burst position of the color reproduction frame.
6) Change the data of page: F, address: 4E, 50, FB and FC, and settle each color luminance point in each color reproduction frame.

Note: Be sure to press the PAUSE button of the adjustment remote commander before changing the addresses. If not, the new data will not be written to the memory.

Processing after Completing Adjustments

1) Select page: 6, address: 01, set data: 00, and press the PAUSE button of the adjustment remote commander.
2) Select page: F, address: E1, set data: 1E, and press the PAUSE button.
3) Select page: 0, address: 01, and set data: 00.

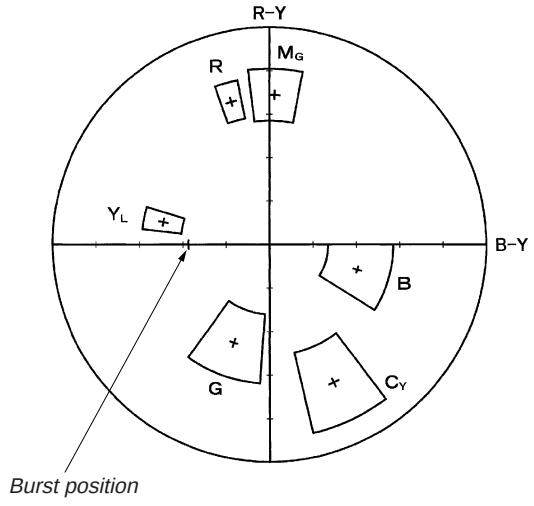

Fig. 5-1-9.

7. IRIS IN/OUT Adjustment

For the unit to judge if the white balance is indoors or outdoors in auto white balance operations, measure the light level and write it in the EEPROM.
If the level is not correct, the white balance will not be accurate.

Subject	Clear chart (Color reproduction adjustment frame)
Measurement Point	DDS display of LCD or TV monitor
Measuring Instrument	(Note)
Adjustment Page	F
Adjustment Address	56, 57

Note: The right four digits of the DDS display data of LCD or TV monitor.

00 XX XX
- XX: Lower two digits
- XX: Upper two digits

Switch setting:

1) NIGHT SHOT ..... OFF
2) DIGITAL ZOOM (Menu display) ..... OFF
3) STEADY SHOT (Menu display) ..... OFF
4) VIDEO LIGHT ..... OFF

Adjusting method:

1) Select page: 0, address: 01, and set data: 01.
2) Select page: 0, address: 03, and set data: 06.
3) Select page: D, address: 11, set data: 02, and press the PAUSE button of the adjustment remote commander.
4) Select page: 6, address: 01, set data: 0B, and press the PAUSE button.
5) Read the DDS display data (Note), and take the upper two digits as D_1 and the lower two as D_2.
6) Convert D_1 to decimal notation, and obtain D_1'. (Refer to Table 5-4-1. "Hexadecimal - decimal conversion table" of "5-4. Service Mode".)
7) Calculate D_3' using the following equations. (Equations 1 and 2 are for decimal notation calculation).
   When $D_2 \geqq D0$
   $D_3' = D_1' - 21$ Equation 1
   When $D_2 < D0$
   $D_3' = D_1' - 22$ Equation 2
8) Convert D_3' to hexadecimal notation, and obtain D_3.
9) Select page: F, address: 56, set data: D_3, and press the PAUSE button.
10) Select page: 6, address: 01, set data: 09, and press the PAUSE button.
11) Read the DDS display data (Note), and take the upper two digits as D_4 and the lower two as D_5.
12) Convert D_4 to decimal notation, and obtain D_4'. (Refer to Table 5-4-1. "Hexadecimal - decimal conversion table" of "5-4. Service Mode".)
13) Calculate D_6' using the following equations. (Equations 3 and 4 are for decimal notation calculation).
   When $D_5 \geqq F0$
   $D_6' = D_4' - 13$ Equation 3
   When $D_5 < F0$
   $D_6' = D_4' - 14$ Equation 4
14) Convert D_6' to hexadecimal notation, and obtain D_6.
15) Select page: F, address: 57, set data: D_6, and press the PAUSE button.

Processing after Completing Adjustments

1) Select page: D, address: 11, set data: 00, and press the PAUSE button of the adjustment remote commander.
2) Select page: 0, address: 01, and set data: 00.
3) Select page: 0, address: 03, and set data: 00.
4) Select page: 6, address: 01, set data: 00, and press the PAUSE button.

8. MAX GAIN Adjustment

Setting the minimum illumination.
If it is not consistent, the image level required for taking subjects in low illuminance will not be produced (dark).

Subject	Clear chart (Color reproduction adjustment frame)
Measurement Point	DDS display of LCD or TV monitor (Note)
Measuring Instrument	
Adjustment Page	F
Adjustment Address	49
Specified Value	C0 to FF

Note: The right two digits of the DDS display data is the object data.

00 00 XX
└──── Object data

Switch setting:

1) NIGHT SHOT ..... OFF
2) DIGITAL ZOOM (Menu display) ..... OFF
3) STEADY SHOT (Menu display) ..... OFF
4) VIDEO LIGHT ..... OFF

Adjusting method:

1) Select page: 0, address: 01, and set data: 01.
2) Select page: D, address: 11, set data: 02, and press the PAUSE button of the adjustment remote commander.
3) Select of page: 0, address: 03, and set data: 01.
4) Select page: 6, address: 56, and set data: 40.
5) Select page: 6, address: 01, set data: 19, and press the PAUSE button of the adjustment remote commander.
6) Select page: F, address: 49, set data: 08, and press the PAUSE button.
7) Check that the DDS display data (Note) lies within the specified value.

Processing after Completing Adjustments

1) Select page: D, address: 11, set data: 00, and press the PAUSE button of the adjustment remote commander.
2) Select page: 0, address: 01, and set data: 00.
3) Select page: 0, address: 03, and set data: 00.
4) Select page: 6, address: 01, set data: 00, and press the PAUSE button.
5) Select page: 6, address: 56, and set data: 00.

9. Auto White Balance Standard Data Input

Subject	Clear chart (Color reproduction adjustment frame)
Adjustment Page	F
Adjustment Address	32 to 35

Note 1: This adjustment should be carried out upon completion of "6. Color Reproduction Adjustment".

Note 2: Check that the data of page: 6, address: 02 is "00". If not, select page: 6, address: 01, set data: 00, and press the PAUSE button of the adjustment remote commander.

Switch setting:

1) NIGHT SHOT ..... OFF
2) DIGITAL ZOOM (Menu display) ..... OFF
3) STEADY SHOT (Menu display) ..... OFF
4) VIDEO LIGHT ..... OFF

Adjusting method:

1) Select page: 0, address: 01, and set data: 01.
2) Wait for 2 seconds.
3) Select page: 6, address: 01, set data: 11, and press the PAUSE button of the adjustment remote commander.
4) Select page: 6, address: 01, set data: 0D, and press the PAUSE button.
   (When the standard data is take in, the data will be automatically input to page: F, address: 32 to 35.)
5) Select page: 6, address: 02, and check that the data is "01".
6) Perform "Auto White Balance Adjustment".

Processing after Completing Adjustments

1) Select page: 6, address: 01, set data: 00, and press the PAUSE button of the adjustment remote commander.
2) Select page: 0, address: 01, and set data: 00.

10. Auto White Balance Adjustment

Adjust to the proper auto white balance output data.
If it is not correct, auto white balance and color reproducibility will be poor.

Subject	Clear chart (Color reproduction adjustment frame)
Filter	Filter C14 for color temperature correction
Measurement Point	DDS display of LCD or TV monitor
Measuring Instrument	(Note 2)
Adjustment Page	F
Adjustment Address	54, 55
Specified Value	R ratio: 2B40 to 2BC0 B ratio: 5E40 to 5EC0

Note 1: Perform "Auto White Balance Standard Data Input" before this adjustment.

Note 2: The right four digits of the DDS display data is the object data.

00 XXXX
└──── Object data

Switch setting:

1) NIGHT SHOT ..... OFF
2) DIGITAL ZOOM (Menu display) ..... OFF
3) STEADY SHOT (Menu display) ..... OFF
4) VIDEO LIGHT ..... OFF

Adjusting method:

1) Place the C14 filter for color temperature correction on the lens.
2) Select page: 0, address: 01, and set data: 01.
3) Select page: D, address: 11, set data: 02, and press the PAUSE button of the adjustment remote commander.
4) Select page: 6, address: 01, set data: 3F, and press the PAUSE button.
5) Select page: 0, address: 03, and set data: 04.
6) Select page: F, address: 54, change the data, and adjust the average value of the DDS display data (Note 2) to the R ratio specified value.
7) Press the PAUSE button.
8) Select page: 0, address: 03, and set data: 05.
9) Select page: F, address: 55, change the data, and adjust the average value of the DDS display data (Note 2) to the B ratio specified value.
10) Press the PAUSE button.

Processing after Completing Adjustments

1) Select page: D, address: 11, set data: 00, and press the PAUSE button of the adjustment remote commander.
2) Select page: 0, address: 01, and set data: 00.
3) Select page: 0, address: 03, and set data: 00.
4) Select page: 6, address: 01, set data: 00, and press the PAUSE button.

11. White Balance Check

Subject	Clear chart (Color reproduction adjustment frame)
Filter	Filter C14 for color temperature correction ND filter 1.0 and 0.3
Measurement Point	Video output terminal
Measuring Instrument	Vectorscope
Specified Value	Fig. 5-1-10. A to C

Switch setting:

1) NIGHT SHOT ..... OFF
2) DIGITAL ZOOM (Menu display) ..... OFF
3) STEADY SHOT (Menu display) ..... OFF
4) VIDEO LIGHT ..... OFF

Checking method:

1) Check that the lens is not covered with either filter.
2) Select page: 6, address: 01, set data: 0F, and press the PAUSE button of the adjustment remote commander.
3) Check that the center of the white luminance point is within the circle shown Fig. 5-1-10. (A).
4) Select page: 6, address: 01, set data: 00, and press the PAUSE button.
5) Select page: 6, address: 01, set data: 23, and press the PAUSE button.
6) Place the C14 filter on the lens.
7) Check that the center of the white luminance point settles in the circle shown Fig. 5-1-10. (B).
8) Remove the C14 filter, and place the ND filter 1.3 (1.0 +0.3) on the lens.
9) Check that the white luminance point stopped moving, and then remove the ND filter 1.3.
10) Check that the center of the white luminance point settles within the circle shown Fig. 5-1-10. (C).

Processing after Completing Adjustments

1) Select page: 6, address: 01, set data: 00, and press the PAUSE button of the adjustment remote commander.

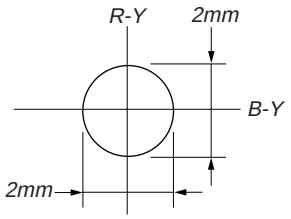

Fig. 5-1-10. (A)

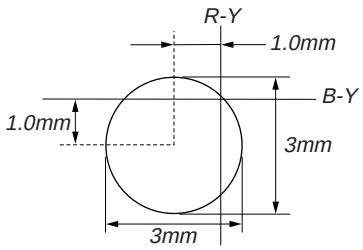

Fig. 5-1-10. (B)

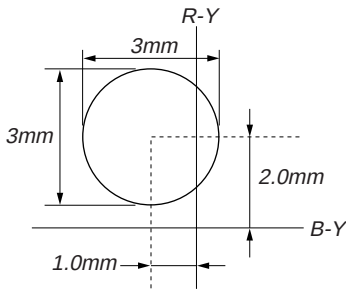

Fig. 5-1-10. (C)

12. Angular Velocity Sensor Sensitivity Preset and Steady shot check

Check the output of the angular velocity sensor.

Precautions on the Parts Replacement

There are two types of repair parts.

Type A ENC03JA
Type B ENC03JB

Replace the broken sensor with a same type sensor. If replace with other type parts, the image will vibrate up and down or left and right during hand-shake correction operations. After replacing, re-adjust according to the adjusting method after replacement.

Precautions on Angular Velocity Sensor

The sensor incorporates a precision oscillator. Handle it with care as if it dropped, the balance of the oscillator will be disrupted and operations will not be performed properly.

Subject	Arbitrary
Measurement Point	Display data of page 1 (Note)
Measuring Instrument	Adjustment remote commander
Adjustment Page	F
Adjustment Address	5F, 60
Specified Value	PITCH data : 3000 to 4600 YAW data : 3000 to 4600

Note: Displayed data of page 1 of the adjustment remote commander.

1 : XX : XX
└──── Display data

Switch setting:

1) ZOOM ..... Center
2) STEADY SHOT (Menu display) ..... ON

Checking method:

1) Select page: 0, address: 01, and set data: 01.
2) Select page: F, address: 5F, set data: 4B, and press the PAUSE button of the adjustment remote commander.
3) Select page: F, address: 60, set data: 54, and press the PAUSE button of the adjustment remote commander.
4) Select page: 0, address: 03, and set data: 11.
5) Select page: 1, and check that the PITCH data satisfies the specified value.
6) Select page: 0, address: 03, and set data: 12.
7) Select page: 1, and check that the YAW data satisfies the specified value.

Processing after Completing Adjustments

1) Select page: 0, address: 01, and set data: 00.
2) Select page: 0, address: 03, and set data: 00.
3) Check that the steady shot operations have been performed normally.

1-4. MONOCHROME ELECTRONIC VIEWFINEDER SYSTEM ADJUSTMENT

1-4-1. Horizontal Slant Check

Mode	Playback
Signal	Alignment tape : For checking operation (WR5-5NSP) Monoscope section
Specified Value	± 1.5°

Adjusting method:

1) Adjust RV904 (BRIGHT) (VF-129 board) so that the CRT can be seen easily and clearly.
2) Check that the difference between the horizontal line and the tilt of black mask satisfies the specified value.

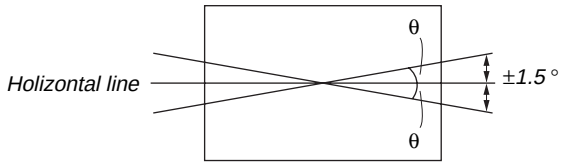

Specified value : The image should be within ± 1.5° of the holizontal line.

Fig. 5-1-11.

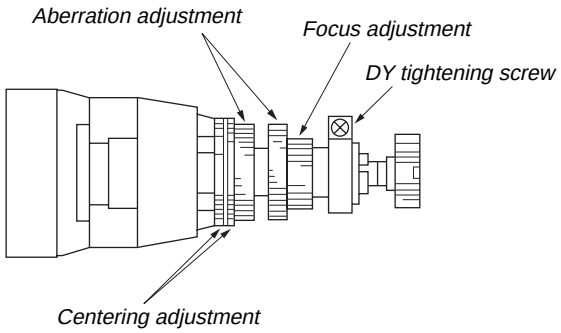

Fig. 5-1-12.

VF-129 BOARD

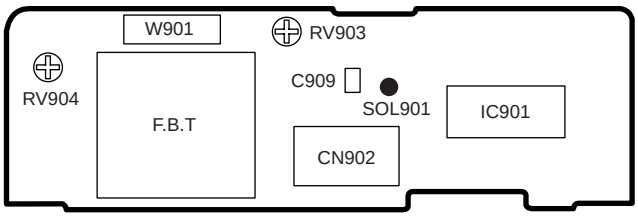

1-4-2. Centering Adjustment

Mode	Playback
Signal	Alignment tape : For checking operation (WR5-5NSP) Monoscope section
Specified Value	± 4%

Adjusting method:

1) Use the centering adjustment ring and adjust so that the left, light, top, and bottom sides of the display are uniform. (Refer to Fig. 5-1-12.)
   Note: As the centering position changes due to earth magnetism, rotate it 360° in the horizontal direction, and adjust with the center section of the modifying position.

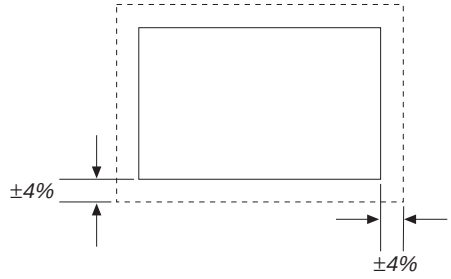

Adjustment value : ±4%

Fig. 5-1-13.

1-4-3. Focus Adjustment

Mode	Playback
Signal	Alignment tape : For checking operation (WR5-5NSP) Monoscope section

Adjusting method:

1) Adjust the focus ring to obtain the optimum focus. (Refer to Fig. 5-1-12.)

1-4-4. Aberration Adjustment

Mode	VTR stop
Signal	Dot pattern
Specified Value	b1 ≦ 2 × a1 b2 ≦ 0.8 × a2

Adjusting method:

1) Adjust the aberration adjustment ring so that the tracing of the dot satisfies the specified value.
2) If the centering becomes displaced here, perform the centering adjustment from the beginning again.

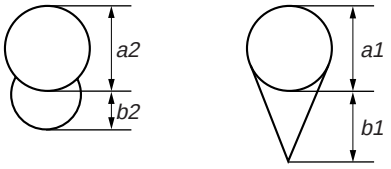

Fig. 5-1-14.

1-4-5. Horizontal Amplitude Adjustment (VF-129 board)

Mode	Playback
Signal	Alignment tape : For checking operation (WR5-5NSP) Monoscope section
Adjusting Element	C909 (SOL901)
Specified Value	10 ± 6%

Adjusting method:

1) Rotate RV903, and adjust the top and bottom side of the monoscope image to the top and bottom edges of the display.
2) Rotate RV904 so that the brightness is the normal level.
3) Solder or unsolder SOL901 pattern of the H size adjustment capacitor (C909) to “short” or “open”, so that the horizontal direction over scan becomes 10 ± 6% (Left and right totals).

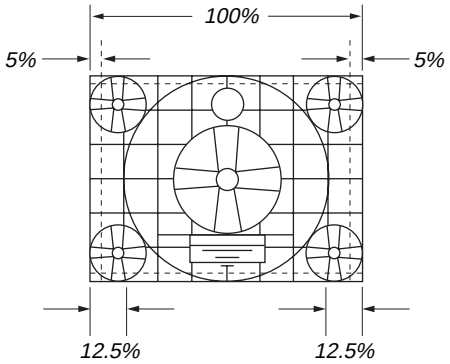

SOL901	Size H
Open	Small
Short	Big

Fig. 5-1-15.

VF-129 BOARD

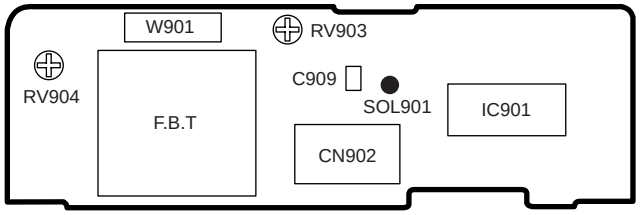

1-4-6. Vertical Amplitude Adjustment (VF-129 board)

Mode	Playback
Signal	Alignment tape : For checking operation (WR5-5NSP) Monoscope section
Adjusting Element	RV903
Specified Value	10 ± 3%

Adjusting method:

1) Adjust RV903 so that the vertical direction over scan becomes 10 ± 3% (Top and bottom totals).

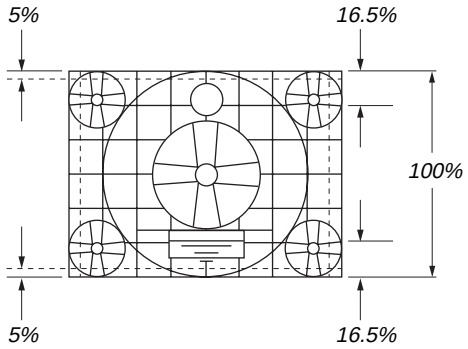

Fig. 5-1-16.

1-4-7. Brightness Adjustment (VF-129 board)

Mode	Playback
Signal	Alignment tape : For checking operation (WR5-5NSP) Monoscope section
Adjusting Element	RV904

Adjusting method:

1) Rotate RV904, and adjust so that the bright/dark sections of gray scale are displayed correctly. (The bright section should be unsatisfactory till the cross hatch appears vague in the monoscope circle. The dark section should be unsatisfactory till the darkest section of the gray scale cannot be differentiate.)

1-4-8. Horizontal Amplitude, Vertical Amplitude, Focus Check

"1-4-5. Horizontal Amplitude Adjustment" and "1-4-6. Vertical Amplitude Adjustment" should be both satisfy the specified values. If not, perform the adjustments from the beginning again. In this case, perform "1-4-7. Brightness Adjustment" again.
Moreover, check the focus, and if it found to be vague, perform "1-4-3. Focus Adjustment" and "1-4-4. Aberration Adjustment".

1-5. LCD SYSTEM ADJUSTMENT

Note 1: The back light (fluorescent tube) is driven by a high voltage AC power supply. Therefore, do not touch the back light holder to avoid electrical shock.

Note 2: When replacing the LCD unit, be careful to prevent damages caused by static electricity.

Note 3: Set the LCD BRIGHT to the center.
Set the LCD COLOR (Menu display) to the center.

[Adjusting connector]

Most of the measuring points for adjusting the LCD display are concentrated in the following connector.

CN5501 of the PD-105 board

Connect the Measuring Instruments via the multi CPC jig (J-6082-311-A).

The following table shows the Pin No. and signal name of the connector.

Pin No.	Signal Name	Pin No.	Signal Name
1	VB	2	VCO VOLTAGE.
3	VG	4	PANEL COM
5	VR	6	N.C.
7	SYNC	8	H START
9	GND	10	GND

1. LCD Initial Data Input

Mode	VTR stop
Signal	Arbitrary
Adjustment Page	E
Adjustment Address	AD to AF, B3 to BC, C2 to C4, D1 to DF

Adjusting method:

1) Select page: 0, address:01, and set data: 01.
2) Select page: E, and input the data in the following table.
   Note: To write in the non-volatile memory (EEPROM), press the PAUSE button of the adjustment remote commander each time to set the data.
3) Select page: 0, address:01, and set data: 00.

Address	Data	Remark
AD	67	Fixed data
AE	91	Fixed data
AF	78	Fixed data
B3	3F	Fixed data
B4	C8	Fixed data
B5	1F	Fixed data
B6	1F	Fixed data
B7	00	Fixed data
B8	00	Fixed data
B9	B0	Fixed data
BA	4E	Fixed data
BB	08	Fixed data
BC	00	Fixed data
C2	80	Fixed data
C3	B3	Fixed data
C4	E0	Fixed data
D1	84	Bright adj.
D2	77	Color adj.
D3	98	White balance adj.
D4	7B	White balance adj.
D5	DC	Contrast adj.
D6	80	D range adj.
D7	89	V-COM level adj.
D8	70	VCO adj.
D9	80	V-COM adj.
DA	80	Fixed data
DB	00	Fixed data
DC	80	Fixed data
DD	52	Fixed data
DE	99	Fixed data
DF	99	Fixed data

2. VCO Adjustment (PD-105 board)

Set the VCO free-run frequency. If deviated, the LCD screen will be blurred.

Mode	VTR stop
Signal	No signal
Measurement Point	Pin ② of CN5501 (VCO VOLTAGE)
Measuring Instrument	Oscilloscope (DC range)
Adjustment Page	E
Adjustment Address	D8
Specified Value	A = $1.70^{+0.03}_{-0.05}$ V

Adjusting method:

1) Select page: 0, address: 01, and set data: 01.
2) Select page: 2, address: 01, set data: 55, and press the PAUSE button of the adjustment remote commander.
3) Select page: 6, address: 7D, and set data: 00.
4) Select page: E, address: D8, change the data and set the VCO VOLTAGE (A) to the specified value.
5) Press the PAUSE button.
6) Select page: 2, address: 01, set data: 00, and press the PAUSE button.
7) Select page: 0, address: 01, and set data: 00.

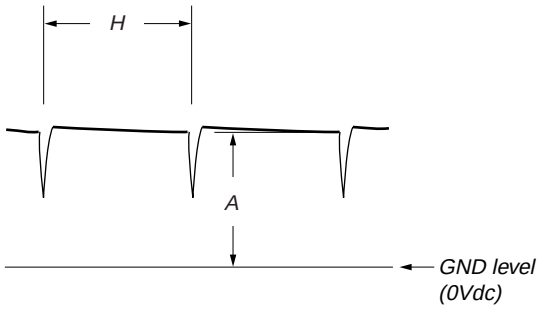

Fig. 5-1-17.

3. D range Adjustment (PD-105 board)

Set the D range of the RGB decoder used to drive the LCD to the specified value. If deviated, the LCD screen will become blackish or saturated (whitish).

Mode	VTR stop
Signal	No signal
Measurement Point	Pin ③ of CN5501 (VG) External trigger : Pin ④ of CN5501 (PANEL COM)
Measuring Instrument	Oscilloscope
Adjustment Page	E
Adjustment Address	D6
Specified Value	A = 3.06 ± 0.05V

Note : Press the DISPLAY button and erase the screen indictors on the LCD screen.

Adjusting method:

1) Select page: 0, address: 01, and set data: 01.
2) Select page: 2, address: 01, set data: 55, and press the PAUSE button of the adjustment remote commander.
3) Select page: 6, address: 7D, and set data: 00.
4) Select page: E, address: D6, change the data and set the voltage (A) between the reversed waveform pedestal and non-reversed waveform pedestal to the specified value.
5) Press the PAUSE button.
6) Select page: 2, address: 01, set data: 00, and press the PAUSE button.
7) Select page: 0, address: 01, and set data: 00.

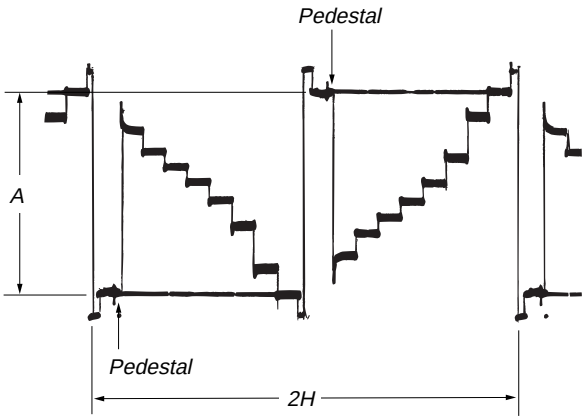

Fig. 5-1-18.

4. Bright Adjustment (PD-105 board)

Set the level of the VIDEO signal for driving the LCD to the specified value. If deviated, the screen image will be blackish or saturated (whitish).

Mode	VTR stop
Signal	No signal
Measurement Point	Pin ③ of CN5501 (VG) External trigger : Pin ④ of CN5501 (PANEL COM)
Measuring Instrument	Oscilloscope
Adjustment Page	E
Adjustment Address	D1
Specified Value	A = 1.34 ± 0.05V

Adjusting method:

1) Select page: 0, address: 01, and set data: 01.
2) Select page: 2, address: 01, set data: 55, and press the PAUSE button of the adjustment remote commander.
3) Select page: 6, address: 7D, and set data: 40.
4) Select page: E, address: D1, change the data and set the voltage (A) between the pedestal and white to the specified value. (The data of address: D1 should be “41” to “BF”.)
5) Press the PAUSE button.
6) Select page: 2, address: 01, set data: 00, and press the PAUSE button.
7) Select page: 6, address: 7D, and set data: 00.
8) Select page: 0, address: 01, and set data: 00.

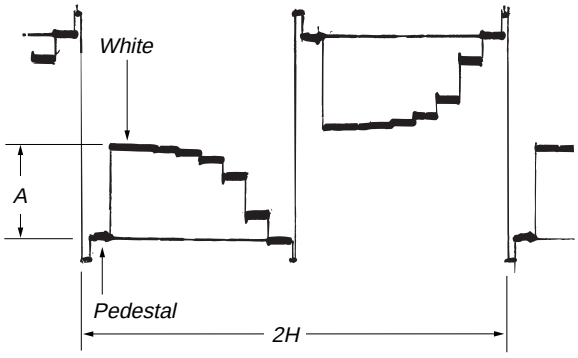

Fig. 5-1-19.

5. Contrast Adjustment (PD-105 board)

Set the level of the VIDEO signal for driving the LCD to the specified value. If deviated, the screen image will be blackish or saturated (whitish).

Mode	VTR stop
Signal	No signal
Measurement Point	Pin ③ of CN5501 (VG) External trigger : Pin ④ of CN5501 (PANEL COM)
Measuring Instrument	Oscilloscope
Adjustment Page	E
Adjustment Address	D5
Specified Value	A = 2.60 ± 0.07V

Adjusting method:

1) Select page: 0, address: 01, and set data: 01.
2) Select page: 2, address: 01, set data: 55, and press the PAUSE button of the adjustment remote commander.
3) Select page: 6, address: 7D, and set data: 00.
4) Select page: E, address: D5, change the data and set the voltage (A) between the pedestal (0 IRE) and 100 IRE to the specified value.
5) Press the PAUSE button.
6) Select page: 2, address: 01, set data: 00, and press the PAUSE button.
7) Select page: 0, address: 01, and set data: 00.

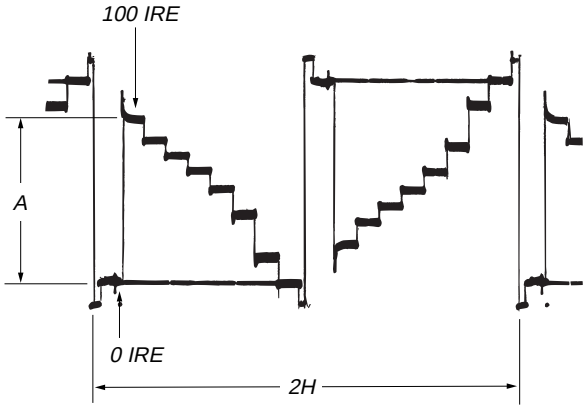

Fig. 5-1-20.

6. V-COM Level Adjustment (PD-105 board)

Set the common electrode drive signal level of LCD to the specified value.

Mode	VTR stop
Signal	No signal
Measurement Point	Pin ④ of CN5501 (PANEL COM)
Measuring Instrument	Oscilloscope
Adjustment Page	E
Adjustment Address	D7
Specified Value	A = 4.50 ± 0.05V

Note : Perform "Bright Adjustment" and "Contrast Adjustment" before this adjustment.

Adjusting method:

1) Select page: 0, address: 01, and set data: 01.
2) Select page: 2, address: 01, set data: 55, and press the PAUSE button of the adjustment remote commander.
3) Select page: 6, address: 7D, and set data: 00.
4) Select page: E, address: D7, change the data and set the PANEL COM signal level (A) to the specified value.
5) Press the PAUSE button.
6) Select page: 2, address: 01, set data: 00, and press the PAUSE button.
7) Select page: 0, address: 01, and set data: 00.

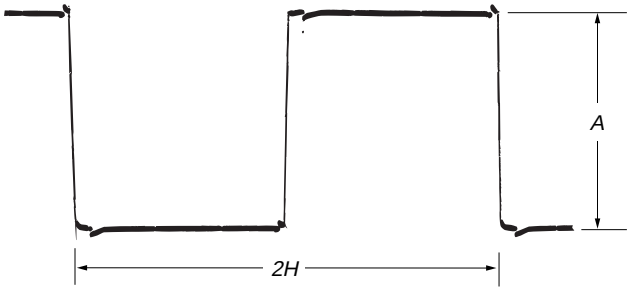

Fig. 5-1-21.

7. Color Adjustment (PD-105 board)

Set the color saturation to the standard value. If deviated, the color will be to dark or light.

Mode	VTR stop
Signal	No signal
Measurement Point	Pin ③ of CN5501 (VG) External trigger : Pin ④ of CN5501 (PANEL COM)
Measuring Instrument	Oscilloscope
Adjustment Page	E
Adjustment Address	D2
Specified Value	A = –0.03 ± 0.05V

Adjusting method:

1) Select page: 0, address: 01, and set data: 01.
2) Select page: 2, address: 01, set data: 57, and press the PAUSE button of the adjustment remote commander.
3) Select page: 6, address: 7D, and set data: 20.
4) Select page: E, address: D2, change the data and set the green level (A) to the specified value in respect to white.
5) Add 9 to the data of page: E, address: D2, and press the PAUSE button.
6) Select page: 2, address: 01, set data: 00, and press the PAUSE button.
7) Select page: 6, address: 7D, and set data: 00.
8) Select page: 0, address: 01, and set data: 00.

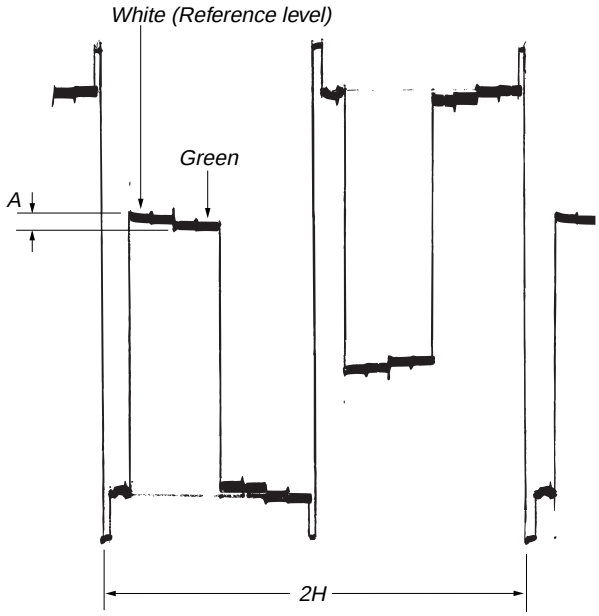

Fig. 5-1-22.

8. V-COM Adjustment (PD-105 board)

Set the DC bias of the common electrode drive signal of LCD to the specified value.
If deviated, the LCD display will move, producing flicker and conspicuous vertical lines.

Mode	VTR stop
Signal	No signal
Measurement Point	Check on LCD display
Measuring Instrument	
Adjustment Page	E
Adjustment Address	D9
Specified Value	The brightness difference between the section A and section B is minimum.

Note : Perform "Bright Adjustment" and "Contrast Adjustment" before this adjustment.

Adjusting method:

1) Select page: 0, address: 01, and set data: 01.
2) Select page: 2, address: 01, set data: 51, and press the PAUSE button of the adjustment remote commander.
3) Select page: 6, address: 7D, and set data: 87.
4) Select page: E, address: D9, change the data so that the brightness of the section A and that of the section B is equal.
5) Press the PAUSE button.
6) Select page: 2, address: 01, set data: 00, and press the PAUSE button of the adjustment remote commander.
7) Select page: 6, address: 7D, and set data: 00.
8) Select page: 0, address: 01, and set data: 00.

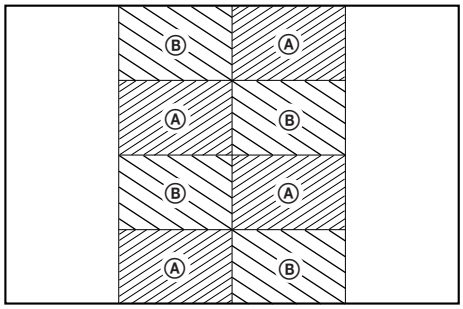

Fig. 5-1-23.

9. White Balance Adjustment (PD-105 board)

Correct the white balance.
If deviated, the LCD screen color cannot be reproduced.

Mode	VTR stop
Signal	No signal
Measurement Point	Check on LCD display
Measuring Instrument	
Adjustment Page	E
Adjustment Address	D3, D4
Specified Value	The LCD screen should not be colored.

Note 1: Check the white balance only when replacing the following parts. If necessary, adjust them.
1. LCD panel
2. Light induction plate
3. IC5502

Adjusting method:

1) Select page: 0, address: 01, and set data: 01.
2) Select page: 2, address: 01, set data: 51, and press the PAUSE button of the adjustment remote commander.
3) Select page: 6, address: 7D, and set data: 02.
4) Select page: E, address: D3 and D4, and set the data to the initial value.
   Note 2: To write in the non-volatile memory (EEPROM), press the PAUSE button of the adjustment remote commander each time to set the data.

Address	Data
D3	98
D4	7B

5) Check that the LCD screen is not colored. If colored, change the data of page: E, address: D3 and D4 so that the LCD screen is not colored.
   Note 2: To write in the non-volatile memory (EEPROM), press the PAUSE button of the adjustment remote commander each time to set the data.
6) Select page: 2, address: 01, set data: 00, and press the PAUSE button.
7) Select page: 6, address: 7D, and set data: 00.
8) Select page: 0, address: 01, and set data: 00.

5-2. MECHANISM SECTION ADJUSTMENT

Mechanism Section adjustments, checks, and replacement of mechanism parts, refer to the separate volume "8mm Video Mechanism Adjustment Manual Ⅶ B Mechanism ".

2-1. OPERATING WITHOUT CASSETTE

1) Refer to "Section 2. DISASSEMBLY" and supply the power with the cabinet assembly removed. (So that the mechanical deck can be operated.)
2) Connect the adjustment remote commander to the LANC jack.
3) Turn on the HOLD switch of the adjustment remote commander.
4) Close the cassette compartment without loading a cassette and complete loading.
5) Select page: 0, address: 01, and set data: 01.
6) Select page: F, address: 2C, set data: 01, and press the PAUSE button of the adjustment remote commander.
7) Select page: D, address: 10, set data: 10, and press the PAUSE button of the adjustment remote commander.
8) Disconnect the power supply of the unit.
   By carrying out the above procedure, the unit can be operated without loading a cassette.
   Be sure to carry out "Processing after Operations" after checking the operations.
   Set the data of page: D, address: 10 to the following if the sensor ineffective mode, forced VTR power supply On mode or forced camera power supply ON mode are to be used together.
   Forced VTR power ON mode 12
   Forced camera power ON mode 11

[Procedure after checking operations]

1) Select page: 0, address: 01, and set data: 01.
2) Select page: F, address: 2C, set data: 00, and press the PAUSE button of the adjustment remote commander.
3) Select page: D, address: 10, set data: 00, and press the PAUSE button of the adjustment remote commander.
4) Select page: 0, address: 01, and set data: 00.
5) Disconnect the power supply of the unit.

2-2. TAPE PATH ADJUSTMENT

1. Preparations for Adjustment

1) Clean the tape path face (tape guide, capstan shaft, pinch roller).
2) Connect the adjustment remote commander to the LANC jack.
3) Turn on the HOLD switch of the adjustment remote commander.
4) Select page: 0, address: 01, and set data: 01.
5) Select page: F, address: 2C, set data: 04, and press the PAUSE button of the adjustment remote commander.
   (Be sure to perform "Processing after operation" after completing adjustments.)
6) Connect the oscilloscope to VC-214 board CN910 via CPC-7 jig (J-6082-382-A).
   Channel 1: VC-214 board, CN910 Pin ⑥
   External trigger: VC-214 board, CN910 Pin ⑪
7) Playback an alignment tape for tracking. (WR5-1NP)
8) Check that the oscilloscope RF waveform is flat at the entrance and exit.
   If not flat, adjust according to the separate volume "8mm Video Mechanical Adjustment Manual Ⅶ B Mechanism ".
9) Perform "Processing after operations", after completing adjustment.

CN910 of VC-214 board

Pin No.	Signal Name	Pin No.	Signal Name
1	LANC SIG	9	RF AGC OUT
2	XCPC IN	10	REC RF
3	IR VIDEO	11	RF SWP
4	AFC F0	12	CAP FG
5	BPF MONI	13	EVF BL
6	PB RF	14	EVF BL 4.75V
7	RF AGC IN	15	VCO
8	REG GND	16	EVF VG

Table 5-2-1.

[Procedure after operations]

1) Connect the adjustment remote commander, and turn on the HOLD switch.
2) Select page: 0, address: 01, and set data: 01.
3) Select page: F, address: 2C, set data: 00, and press the PAUSE button of the adjustment remote commander.
4) Select page: 0, address: 01, and set data: 00.
5) Remove the power supply from the unit.

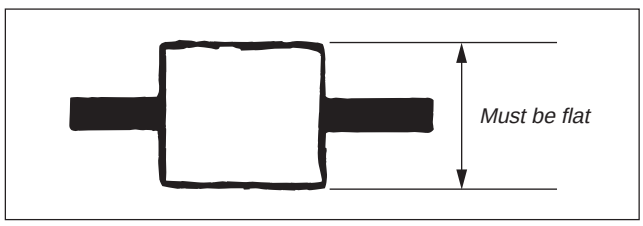

Fig. 5-2-1.

5-3. VIDEO SECTION ADJUSTMENTS

3-1. PREPARATIONS BEFORE ADJUSTMENTS

Use the following measuring instruments for video section adjustments.

3-1-1. Equipment to Required

1) TV monitor
2) Oscilloscope (dual-phenomenon, band width above 30 MHz with delay mode) (Unless specified otherwise, use a 10 : 1 probe.)
3) Frequency counter
4) Pattern generator with video output terminal
5) Digital voltmeter
6) Audio generator
7) Audio level meter
8) Audio distortion meter
9) Audio attenuator
10) Regulated power supply
11) Alignment tapes
    - For tracking adjustment (WR5-1NP)
      Parts code : 8-967-995-02
    - For video frequency characteristics adjustment (WR5-7NE)
      Parts code : 8-967-995-13
    - For checking Standard 8 mode operations
    - For LP (WR5-4NL)
      Parts code : 8-967-995-51
    - For SP (WR5-5NSP)
      Parts code : 8-967-995-42

    Note: The following alignment tapes can also be used.
    WR5-4NSP (8-967-995-41)

    - For checking Hi8 mode operations
    - For LP (WR5-8NLE)
      Parts code : 8-967-995-52
    - For SP (WR5-8NSE)
      Parts code : 8-967-995-43
    - For Checking AFM stereo operations (WR5-9NS)
      Parts code : 8-967-995-23
    - For BPF adjustment (WR5-11NS)
      Parts code : 8-967-995-71
12) Adjustment remote commander (J-6082-053-B)
13) CPC-7 jig (J-6082-382-A)
14) Power code (J-6082-223-A)

    Note: Connect the adjustment remote commander to the LANC jack, and set the HOLD switch to the “ADJ” side.
15) AFM DEV jig (J-6082-312-A)
16) IR receiver jig (J-6082-383-A)
17) Extension cable (70P, 0.5mm)
    For extension between the DD-117 board (CN931) and the VC-214 board (CN914) (J-6082-439-A)

3-1-2. Precautions on Adjusting

1) The adjustments of this unit are performed in the VTR mode or camera mode.
   To set to the VTR mode, set the power switch to "VTR" or set the "Forced VTR Power ON mode" using the adjustment remote commander (Note 1).
   To set to the Camera mode, set the power switch to "CAMERA" or set the "Forced Camera Power ON mode" using the adjustment remote commander (Note 2).
   After completing adjustments, be sure to exit the "Forced VTR Power ON Mode" or "Forced Camera Power ON Mode". (Note 3)
2) By setting the "Forced VTR Power ON mode" or "Forced Camera Power ON mode", the video section can be operate even if even if the front panel block (MA-351 board, power switch, microphone unit) has been removed. When removing the front panel block disconnect the following connector.
   1. VC-214 board CN903 (20P 0.5mm)
3) The lens block (CD-209 board) and VL-23 board need not be connected except during battery end adjustment. To remove, disconnect the following connectors.
   1. VC-214 board CN501 (16P, 0.5mm)
   2. VC-214 board CN551 (24P, 0.5mm)
   3. VL-23 board CN151 (8P, 0.5mm)
4) Cabinet (R) (Camera function switch (CF-56 board), LCD block, viewfinder) need not be connected. But removing the cabinet (R) (removing the VC-214 board CN911) means removing the lithium 3V power supply (CF-56 board) , data such as date, time, user-set menus will be lost. After completing adjustments, reset these data. If the cabinet (R) has been removed, the self-diagnosis data, data on history of use (total drum rotation time etc.) will be lost. Before removing, note down the self-diagnosis data and data on history use (data of page: 2, address: A2 to AA). (Refer to the "Service Mode" for the data on the history use.) To remove the cabinet (R), disconnect the following connectors.
   1. VC-214 board CN911 (50P, 0.5mm)
   2. DD-117 board CN933 (10P, 1.0mm)

Note 1: Setting the "Forced VTR Power ON" mode (VTR mode)
1) Select page: 0, address: 01, and set data: 01.
2) Select page: D, address: 10, set data: 02, and press the PAUSE button of the adjustment remote commander.
The above procedure will enable the VTR power to be turned on with the front panel block removed.
After completing adjustments, be sure to exit the "Forced VTR Power ON mode".

Note 2: Setting the "Forced Camera Power ON" mode (Camera mode)
1) Select page: 0, address: 01, and set data: 01.
2) Select page: D, address: 10, set data: 01, and press the PAUSE button of the adjustment remote commander.
The above procedure will enable the camera power to be turned on with the front panel block removed.
After completing adjustments, be sure to exit the "Forced Camera Power ON mode".

Note 3: Exiting the "Forced Power ON" mode
1) Select page: 0, address: 01, and set data: 01.
2) Select page: D, address: 10, set data: 00, and press the PAUSE button of the adjustment remote commander.
3) Select page: 0, address: 01, and set data: 00.

3-1-3. Adjusting Connectors

Some of the adjusting points of the video section are concentrated at VC-214 board CN910. Connect the measuring instruments via the CPC-7 jig (J-6082-382-A). The following table lists the pin numbers and signal names of CN910.

Pin No.	Signal Name	Pin No.	Signal Name
1	LANC SIG	9	RF AGC OUT
2	XCPC IN	10	REC RF
3	IR VIDEO	11	RF SWP
4	AFC F0	12	CAP FG
5	BPF MONI	13	EVF BL
6	PB RF	14	EVF BL 4.75V
7	RF AGC IN	15	VCO
8	REG GND	16	EVF VG

Table 5-3-1.

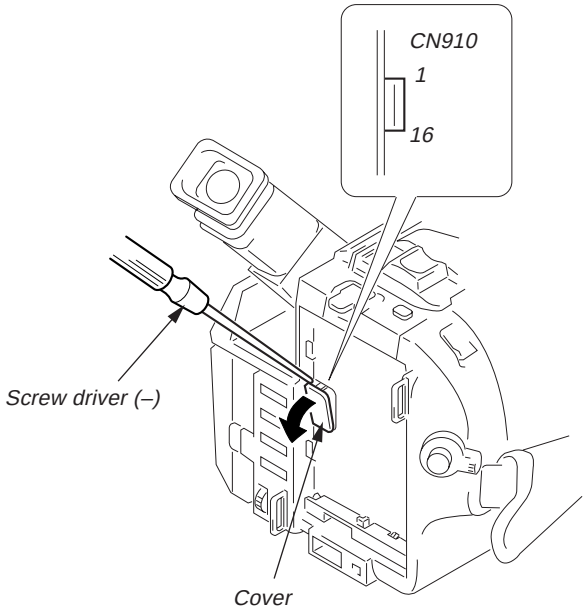

Fig. 5-3-1.

3-1-4. Connecting the Equipments

Connecting the measuring instruments as shown in Fig. 5-3-2 and perform the adjustments.

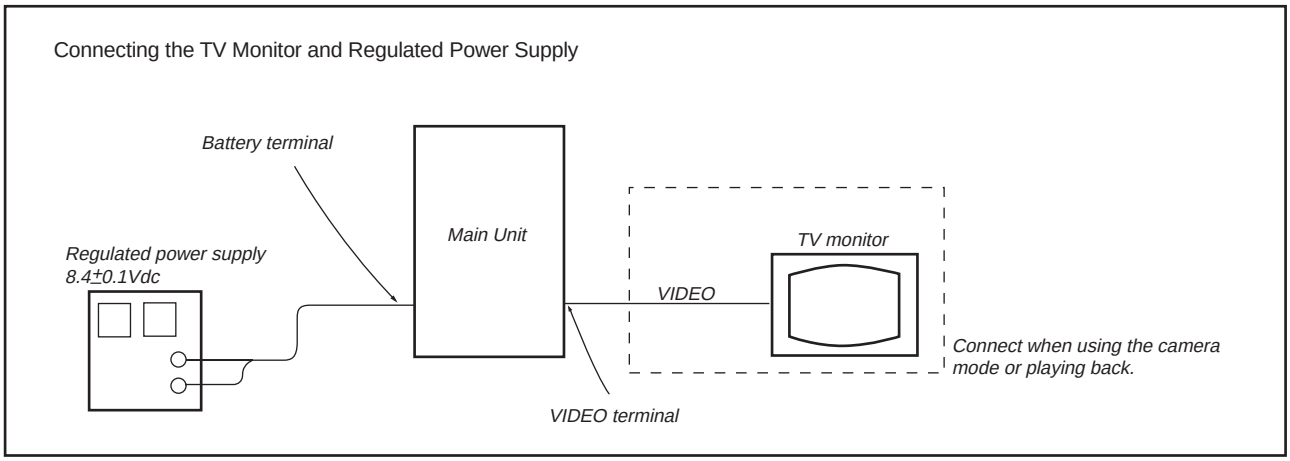

Fig. 5-3-2.

3-1-5. Alignment Tape

The following table lists alignment tapes which are available. Use the tape specified in the signal column for each adjustment. If the type of tape to be used for checking operations is not specified, use whichever type.

Name	Record-ing mode	Tape type	Tape speed	Usage
Tracking WR5-1NP	Standard 8 mm	MP	SP	Tape path adjustment Switching position adjustment
Video frequency characteristics WR5-7NE	Hi8	ME	SP	Frequency characteristics adjustment
Operation check (SP mode) WR5-5NSP	Standard 8 mm	MP	SP	Checking operations
Operation check (SP mode) WR5-8NSE	Hi8	ME	SP	
Operation check (LP mode) WR5-4NL	Standard 8 mm	MP	LP	
Operation check (LP mode) WR5-8NLE	Hi8	ME	LP	
AFM stereo Operation check WR5-9NS	Standard 8 mm	MP	SP	AFM stereo Checking operations
BPF adjustment WR5-11NS	Hi8	MP	SP	BPF adjustment

Fig. 5-3-3. Shows the color bar signals recorded on the alignment tape.

Note : Measure using the VIDEO terminal (Terminated at 75 Ω).

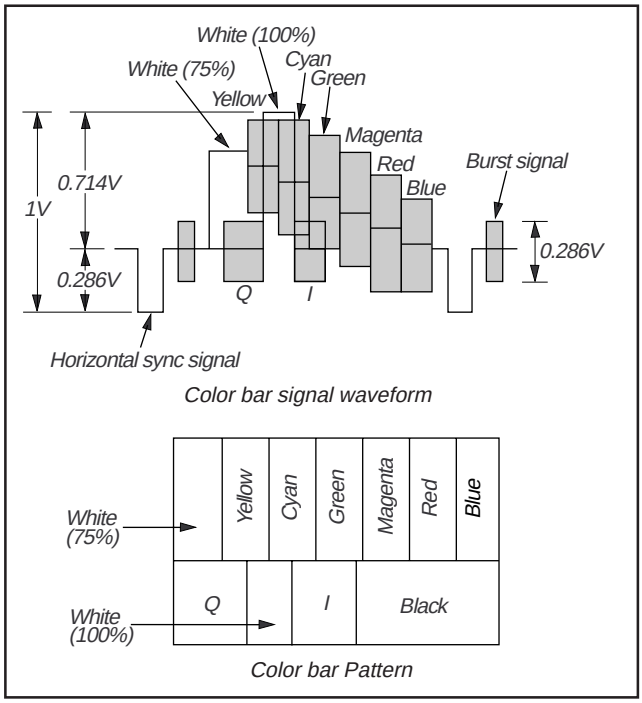

Fig. 5-3-3. Color Bar Signals of the Alignment Tape

3-1-6. Input/Output Level and Impedance

Video input/output
Phono jack, 1 Vp-p, 75Ω,
unbalanced, sync negative
S video input/output
4-pin mini DIN
Luminance signal:
1Vp-p, 75Ω, unbalanced, sync negative
Chrominance signal:
0.286Vp-p 75Ω, unbalanced
Audio input/output
Phono jack,
Input: –7.5 dBs, input impedance more than 47 kΩ
Output: –7.5 dBs, (at load impedance 47 kΩ), impedance less than 2.2 kΩ

3-1-7. Recording Mode (Standard 8/Hi8) switching

The record mode (Standard 8/Hi8) of this unit switches as shown in the following table. The playback mode (Standard 8/Hi8) switches automatically according to the recording mode of the tape played back.

Tape Used	Recording Mode
ME	Hi8
Hi8 MP	
MP	Standard 8

3-2. SYSTEM CONTROL SYSTEM ADJUSTMENT

1. Initialization of D, E, F Page Data

If the D, E, F page data is erased due to some reason, perform "1-2. INITIALIZATION OF D, E, F PAGE DATA", of "5-1. CAMERA SECTION ADJUSTMENT"

2. Battery End Adjustment (VC-214 board)

Set the battery end voltage.
If the voltage is incorrect, the life of the battery will shorten.
The image at the battery end will also be rough.

Mode	Camera recording
Subject	Arbitrary
Measurement Point	LCD display of the adjustment remote commander
Measuring Instrument	
Adjustment Page	D
Adjustment Address	30 to 34

Note 1: The lens block and cabinet (R) must be connected.

Switch setting

1) AUTO FOCUS ..... OFF
2) LCD screen ..... Closed
3) NIGHT SHOT ..... OFF
4) VIDEO LIGHT ..... OFF

Connection:

1) Connect the regulated power supply and the digital voltmeter to the battery terminal as shown in Fig. 5-3-4.

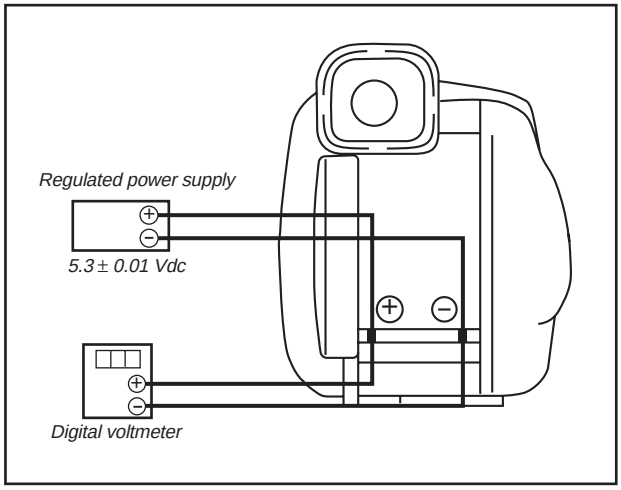

Fig. 5-3-4.

Adjusting method:

1) Adjust the output voltage of the regulated power supply so that the digital voltmeter display is 6.1 ± 0.1Vdc.
2) Turn off the power supply.
3) Turn on the HOLD switch of the adjustment remote commander.
4) Turn on the power supply.
5) Load a cassette, and set to the camera recording mode.
6) Select page: 0, address: 01, and set data: 01.
7) Decrease the output voltage of the regulated power supply so that the digital voltmeter display is 5.30 ± 0.01Vdc.
8) Select page: 2, address: 5D, read the data, and this data is named Dref.
9) Select page: D, address: 30, set data: Dref, and press the PAUSE button of the adjustment remote commander.
10) Convert Dref to decimal notation, and obtain Dref'. (Refer to Table 5-4-1. "Hexadecimal-decimal conversion table" of "5-4. Service Mode".)
11) Calculate D_{31}', D_{32}', D_{33}' and D_{34}' using following equations (decimal calculation), convert it to a hexadecimal number, and input each adjustment address.
    Address: 31 $D_{31}' = Dref' + 5$
    Address: 32 $D_{32}' = Dref' + 32$
    Address: 33 $D_{33}' = Dref' + 53$
    Address: 34 $D_{34}' = Dref' + 64$

    Note 2: After setting each data, be sure to press the PAUSE button.
12) Select page: 0, address: 01, and set data: 00.

3-3. SERVO SYSTEM ADJUSTMENTS

1. CAP FG Offset Adjustment (VC-214 board)

Improve the capstan servo characteristic. If it is not correct. jitters will increase.

Mode	Camera recording (SP mode)
Subject	Arbitrary
Measurement Point	Pin ⑫ of CN910 (CAP FG)
Measuring Instrument	Oscilloscope
Adjustment Page	F
Adjustment Address	61
Specified value	Duty = 50 ± 1 %

Adjusting method:

1) Set to the Camera recording mode (SP mode).
2) Select page: 0, address: 01, and set data: 01.
3) Select page: 6, address: 01, set data: 81, and press the PAUSE button of the adjustment remote commander. (to start up automatic CAP FG offset adjustment.)
4) Select page: 6, address: 02, and check that the data is “01”.
5) Check that Duty of CAP FG signal satisfies the specified value. If not, select page: 6, address: 01, set data: 00, and press the PAUSE button, and then, repeat steps 1) to 5).
6) Select page: 6, address: 01, set data: 00, and press the PAUSE button of the adjustment remote commander.
7) Select page: 0, address: 01, and set data: 00.

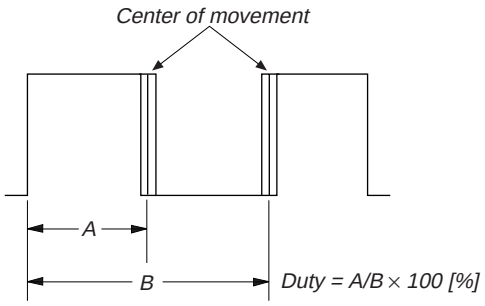

Fig. 5-3-5.

2. Switching Position Adjustment (VC-214 board)

If deviated in this case causes switching noise or jitter on the played back screen.

Mode	Playback
Signal	Alignment tape: For tracking adjustment (WR5-1NP)
Measurement Point	CH1: Pin ⑪ of CN910 (RF SWP) CH2: Pin ⑥ of CN910 (PB RF)
Measuring Instrument	Oscilloscope
Adjustment Page	F
Adjustment Address	3E, 3F
Specified Value	t1 = 0 ± 10 µsec

Adjusting Method:

1) Select page: 0, address: 01, and set data: 01.
2) Select page: F, address: 2C, set data: 20, and press the PAUSE button of the adjustment remote commander.
3) Select page: F, address: 3E, change the data and minimize “t1”, and then press the PAUSE button of the adjustment remote commander. (Coarse adjustment)
4) Select page: F, address: 3F, change the data and adjust so that the switching position (t1) becomes the specified value. (Fine adjustment)
5) Press the PAUSE button of the adjustment remote commander.
6) Select page: F, address: 2C, set data: 00, and press the PAUSE button of the adjustment remote commander.
7) Select page: 0, address: 01, and set data: 00.

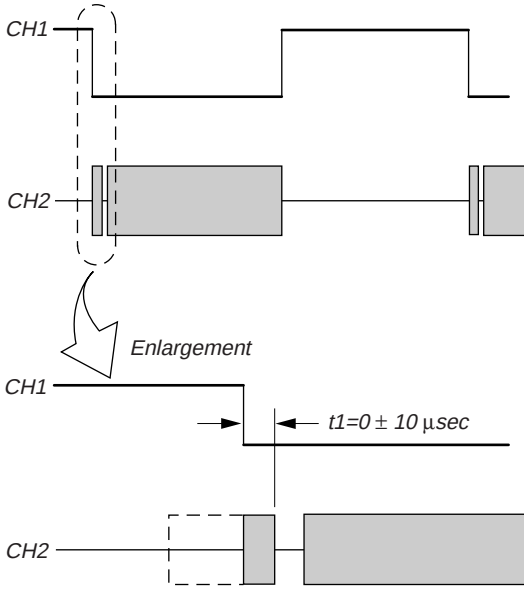

Fig. 5-3-6.

3-4. VIDEO SYSTEM ADJUSTMENTS

Video system adjustments must be performed in the following order.

[Adjusting Order]

1. 28MHz origin oscillation adjustment
2. AFC f_0 adjustment
3. Filter f_0 adjustment
4. Y OUT level adjustment
5. C OUT level adjustment
6. RP filter f_0 adjustment
7. REC Y current adjustment
8. REC L level adjustment
9. REC C current adjustment

1. 28 MHz Origin Oscillation Adjustment (VC-214 board)

Set the frequency of the clock for synchronization.
If deviated, the synchronization will be disrupted and the color will become inconsistent.

Mode	VTR stop
Signal	No signal
Measurement Point	Pin ㉜ of IC301 or pin ⑫ of IC501
Measuring Instrument	Frequency counter
Adjustment Page	F
Adjustment Address	40
Specified Value	Pin ㉜ of IC301 : f=3579545 ± 17Hz Pin ⑫ of IC501 : f=14318181 ± 68Hz

Adjusting method:

1) Select page: 0, address: 01, and set data: 01.
2) Select page: 2, address: 01, set data: 41, and press the PAUSE button of the adjustment remote commander.
3) Select page: 6, address: 61, and set data: 30.
4) Select page: F, address: 40, change the data and set the clock frequency (f) to the specified value.
5) Press the PAUSE button of the adjustment remote commander.
6) Select page: 6, address: 61, and set data: 10.
7) Select page: 2, address: 01, set data: 00, and press the PAUSE button of the adjustment remote commander.
8) Select page: 0, address: 01, and set data: 00.

2. AFC f_0 Adjustment (VC-214 board)

Adjust the pull-in range of the A/D converted clock generator during playback.

Mode	VTR stop
Signal	No signal
Measurement Point	Pin ④ of CN910 (AFC f0)
Measuring Instrument	Digital voltmeter
Adjustment Page	F
Adjustment Address	6A
Specified Value	A=2.00 ± 0.05Vdc

Adjusting method:

1) Select page: 0, address: 01, and set data: 01.
2) Select page: 2, address: 01, set data: 4D, and press the PAUSE button of the adjustment remote commander.
3) Select page: F, address: 6A, change the data and set the DC voltage (A) to the specified value.
4) Press the PAUSE button of the adjustment remote commander.
5) Select page: 2, address: 01, set data: 00, and press the PAUSE button of the adjustment remote commander.
6) Select page: 0, address: 01, and set data: 00.

VC-214 BOARD

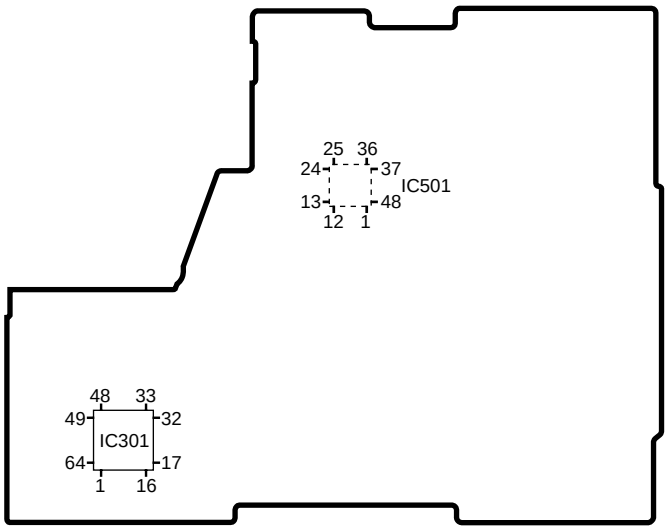

3. Filter f_0 Adjustment (VC-214 board)

Adjust the f_0 frequency of the IC151 built-in filter.

Mode	VTR stop
Signal	No signal
Measurement Point	Pin ③ of CN910 (IR VIDEO)
Measuring Instrument	Oscilloscope
Adjustment Page	F
Adjustment Address	6D
Specified Value	Minimum residual chroma signal components (A= Bellow 12mV)

Switch setting:

LASER LINK ..... ON (Red LED is lit)

Adjusting method:

1) Select page: 0, address: 01, and set data: 01.
2) Select page: 2, address: 01, set data: 4F, and press the PAUSE button of the adjustment remote commander.
3) Select page: F, address: 6D, change the data and minimize the residual chroma signal components (A).
4) Press the PAUSE button of the adjustment remote commander.
5) Select page: 2, address: 01, set data: 00, and press the PAUSE button of the adjustment remote commander.
6) Select page: 0, address: 01, and set data: 00.

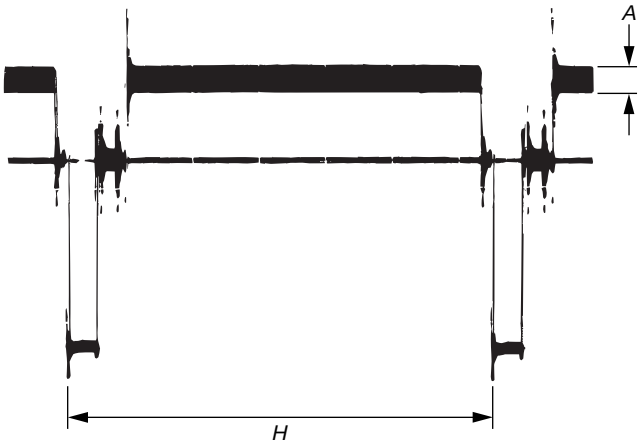

Fig. 5-3-7.

4. Y OUT Level Adjustment (VC-214 board)

Set the Y signal output level. (Adjust the D/A converter out put level of IC151.)

Mode	VTR stop
Signal	No signal
Measurement Point	Y signal terminal of S VIDEO terminal (75Ω terminated)
Measuring Instrument	Oscilloscope
Adjustment Page	F
Adjustment Address	69
Specified Value	A=286 ± 5mV

Note : Insert the plug into the S video terminal.

Adjusting method:

1) Select page: 0, address: 01, and set data: 01.
2) Select page: 2, address: 01, set data: 41, and press the PAUSE button of the adjustment remote commander.
3) Select page: 6, address: 61, and set data: 30.
4) Select page: F, address: 69, change the data and set the SYNC level (A) to the specified value.
5) Press the PAUSE button of the adjustment remote commander.
6) Select page: 6, address: 61, and set data: 10.
7) Select page: 2, address: 01, set data: 00, and press the PAUSE button of the adjustment remote commander.
8) Select page: 0, address: 01, and set data: 00.

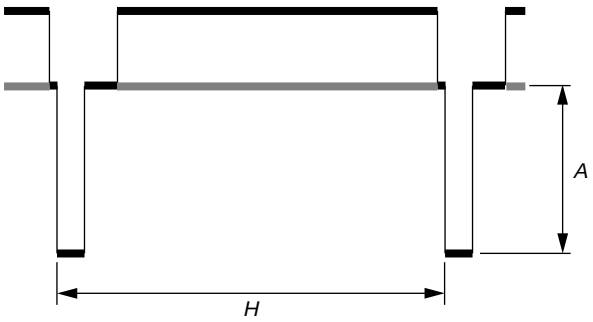

Fig. 5-3-8.

5. C OUT Level Adjustment (VC-214 board)

Set the chroma signal output level. (Adjust the D/A converter out put level of IC151.)

Mode	VTR stop
Signal	No signal
Measurement Point	Chroma signal terminal of S VIDEO terminal (75Ω terminated)
Measuring Instrument	Oscilloscope
Adjustment Page	F
Adjustment Address	6B
Specified Value	A=286 ± 5mV

Note : Insert the plug into the S video terminal.

Adjusting method:

1) Select page: 0, address: 01, and set data: 01.
2) Select page: 2, address: 01, set data: 41, and press the PAUSE button of the adjustment remote commander.
3) Select page: 6, address: 61, and set data: 30.
4) Select page: F, address: 6B, change the data and set the burst level (A) to the specified value.
5) Press the PAUSE button of the adjustment remote commander.
6) Select page: 6, address: 61, and set data: 10.
7) Select page: 2, address: 01, set data: 00, and press the PAUSE button of the adjustment remote commander.
8) Select page: 0, address: 01, and set data: 00.

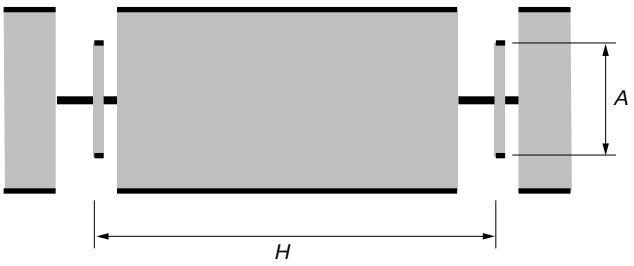

Fig. 5-3-9.

6. RP Filter f_0 Adjustment (VC-214 board)

Adjust the LPF of the playback RF amplifier (IC001).

Mode	VTR stop
Signal	No signal
Measurement Point	Pin ⑨ of CN910 (RF AGC OUT)
Measuring Instrument	Oscilloscope
Adjustment Page	F
Adjustment Address	6E
Specified Value	A= Minimum

Connection:

1) Input a 14.2MHz, 400mVp-p CW signal to Pin ⑦ of CN910 (RF AGC IN).

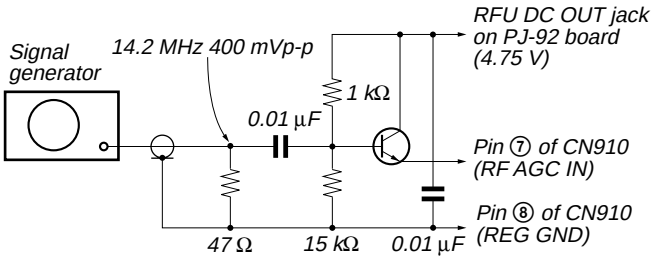

Transistor : General NPN transistor (2SC403, etc)
47 Ω resistor : 1-249-401-11
1 kΩ resistor : 1-249-417-11
15 kΩ resistor : 1-249-431-11
0.01 µF capacitor : 1-101-004-00

Fig. 5-3-10.

Adjusting method:

1) Select page: 0, address: 01, and set data: 01.
2) Select page: 2, address: 01, set data: 35, and press the PAUSE button of the adjustment remote commander.
3) Select page: F, address: 6E, change the data and minimize the 14.2 MHz signal level (A).
4) Press the PAUSE button of the adjustment remote commander.
5) Select page: 2, address: 01, set data: 00, and press the PAUSE button of the adjustment remote commander.
6) Select page: 0, address: 01, and set data: 00.

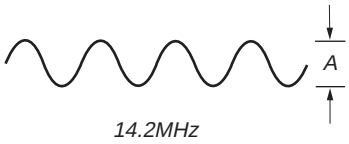

Fig. 5-3-11.

7. REC Y Current Adjustment (VC-214 board)

Adjust the Y FM signal recording current.

Mode	VTR recording (SP mode)
Signal	No signal
Measurement Point	Pin ⑩ of CN910 (REC RF)
Measuring Instrument	Oscilloscope (20 MHz BW LIMIT: OFF)
Adjustment Page	F
Adjustment Address	73 to 7A
Specified Value	A=160 ± 5mV

Adjusting method:

1) Insert a tape, and set to recording mode.
2) Select page: 0, address: 01, and set data: 01.
3) Select page: F, address: 7C, after note down the data , set data: 00, and press the PAUSE button of the adjustment remote commander.
4) Select page: F, address: 85, after note down the data , set data: 00, and press the PAUSE button of the adjustment remote commander.
5) Select page: 2, address: 01, set data: 41, and press the PAUSE button of the adjustment remote commander.
6) Select page: F, address: 74 , change the data and set the Y signal level (A) to the specified value.
7) Press the PAUSE button of the adjustment remote commander.
8) Select page: F, address: 74 , and read the data (D_{74}).
9) Calculate the adjustment data from the following equations, and input each adjustment address.
   Address: 73 $D_{73} = D_{74}$
   Address: 75 $D_{75} = D_{74}$
   Address: 76 $D_{76} = D_{74}$
   Note: After setting each data, be sure to press the PAUSE button of the adjustment remote commander.
10) Write the following data in page: F, address: 77 to 7A .

Address	Data
77	6D
78	7C
79	6D
7A	7C

   Note: After setting each data, be sure to press the PAUSE button of the adjustment remote commander.
11) Select page: F, address: 7C, set the data noted down at step 3), press the PAUSE button of the adjustment remote commander.
12) Select page: F, address: 85, set the data noted down at step 4), press the PAUSE button of the adjustment remote commander.
13) Select page: 2, address: 01, set data: 00, and press the PAUSE button of the adjustment remote commander.
14) Select page: 0, address: 01, and set data: 00.

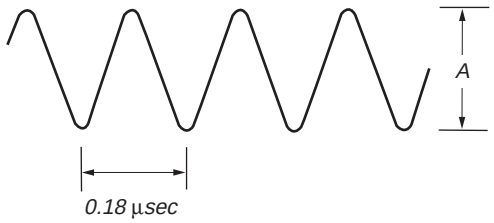

Fig. 5-3-12.

8. REC L Level Adjustment (VC-214 board)

Set the recording levels of the REC AFM signal and REC ATF signal. If the level is too low, the audio S/N will deteriorated, tracking will not be stable, or SP/LP will not be discriminated properly. If too high, color beets will be produced on the self-recording / playback image.

Mode	VTR recording (SP mode)
Signal	No signal
Measurement Point	Pin ⑩ of CN910 (REC RF)
Measuring Instrument	Oscilloscope (20 MHz BW LIMIT: OFF)
Adjustment Page	F
Adjustment Address	7B to 84
Specified Value	A=10.1 ± 0.6mV

Note 1: Do not insert any plug into the AUDIO (R) terminal.

Connection:

1) Remove C085 (0.01µF, Pin ⑯ of IC202).
   Note 2: After completing "REC L Level Adjustment" and "REC C Current Adjustment", replace C085 with new parts (1-182-970-11 CERAMIC CHIP 0.01µF 10% 25V).

Adjusting method:

1) Insert Hi8 ME tape, and set to recording mode.
2) Select page: 0, address: 01, and set data: 01.
3) Select page: F, address: 7B, set data: 00, and press the PAUSE button of the adjustment remote commander.
4) Select page: F, address: 85, set data: 00, and press the PAUSE button of the adjustment remote commander.
5) Select page: F, address: 7C, change the data and set the REC AFM signal level (A) to the specified value.
6) Press the PAUSE button of the adjustment remote commander.
7) Select page: F, address: 7C, read the data (D_{7C}).
8) Convert D_{7C} to decimal notation, and obtain D_{7C}'. (Refer to Table 5-4-1. "Hexadecimal-decimal conversion table" of "5-4. Service Mode".)
9) Calculate the adjustment data (decimal) from the following equations (decimal calculation), convert it to a hexadecimal number, and input each adjustment address.
   Address: 7B $D_{7B}' = D_{7C}'$
   Address: 7D $D_{7D}' = D_{7C}'$
   Address: 7E $D_{7E}' = D_{7C}'$
   Address: 7F $D_{7F}' = D_{7C}' - 56$
   Address: 80 $D_{80}' = D_{7C}' - 56$
   Address: 81 $D_{81}' = D_{7C}' - 56$
   Address: 82 $D_{82}' = D_{7C}' - 56$
   Note 3: After setting each data, be sure to press the PAUSE button of the adjustment remote commander.
10) Write the following data in page: F, address: 83 to 84.

Address	Data
83	A4
84	A4

   Note 3: After setting each data, be sure to press the PAUSE button of the adjustment remote commander.
11) Select page: 0, address: 01, and set data: 00.
12) Perform "REC C Current Adjustment".

VC-214 BOARD

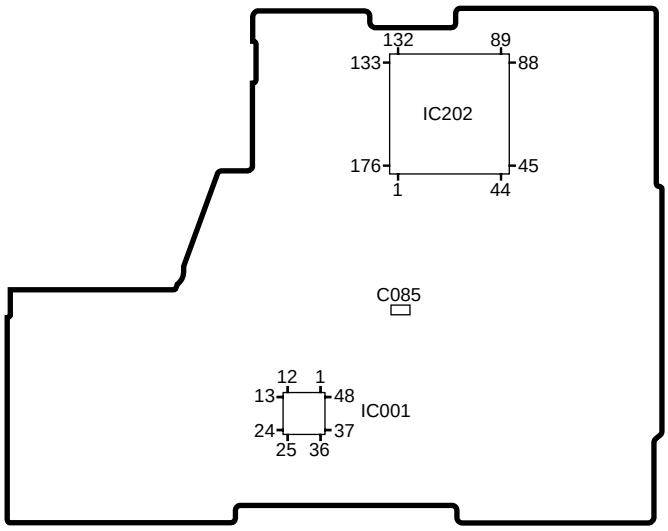

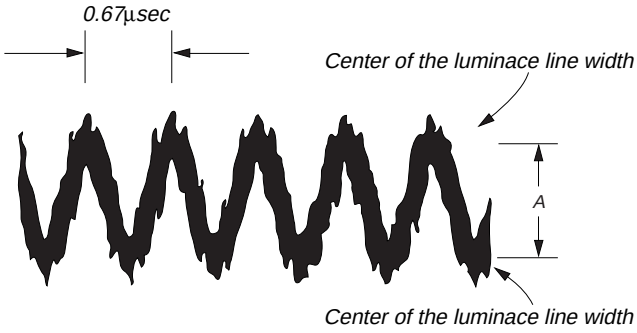

Fig. 5-3-13.

9. REC C Current Adjustment (VC-214 board)

Set the recording current levels of the REC Chroma signal. If it is too low, chroma signal noise in played back picture will increased. If too high, Y signal noises will increase and white modulation noises will be produced.

Mode	VTR recording (SP mode)
Signal	No signal
Measurement Point	Pin ⑩ of CN910 (REC RF)
Measuring Instrument	Oscilloscope
Adjustment Page	F
Adjustment Address	85
Specified Value	A=34.6 ± 1.2mV

Connection:

1) Remove C085 (0.01µF, Pin ⑯ of IC202).
   Note: After completing "REC L Level Adjustment" and "REC C Current Adjustment", replace C085 with new parts (1-162-970-11 CERAMIC CHIP 0.01µF 10% 25V).
2) Connect Pin ㊺ of IC001 and GND with a 0.01F capacitor.
   0.01µF capacitor: 1-101-004-00

Adjusting method:

1) Insert a tape, and set to recording mode.
2) Select page: 0, address: 01, and set data: 01.
3) Select page: 2, address: 01, set data: 41, and press the PAUSE button of the adjustment remote commander.
4) Select page: 6, address: 61, and set data: 30.
5) Select page: F, address: 85, change the data and set the REC chroma signal level (A) to the specified value.
6) Press the PAUSE button of the adjustment remote commander.
7) Select page: 6, address: 61, and set data: 10.
8) Select page: 2, address: 01, set data: 00, and press the PAUSE button of the adjustment remote commander.
9) Select page: 0, address: 01, and set data: 00.

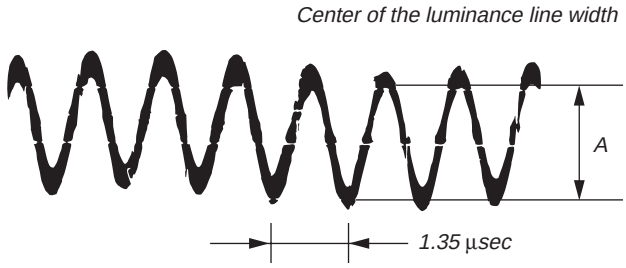

Fig. 5-3-14.

3-5. IR TRANSMITTER ADJUSTMENTS

Adjust using a IR receiver jig (J-6082-383-A).

Note : If the distance between the IR receiver jig and the camcorder is below 1m, cover the LASER LINK emitter with a ND filter. (For example, when the distance is 30cm to 50cm, cover the LASER LINK emitter with a ND filter 1.0.)

Switch setting:

LASER LINK ..... ON (Red LED is lit)

1. IR Video Carrier Frequency Adjustment (VC-214 board)

Mode	Camera standby
Subject	Arbitrary
Measurement Point	Pin ⑤ of CN003 of IR receiver jig (RF) (Or Pin ⑯ of IC751 of VC-214 board)
Measuring Instrument	Frequency counter
Adjustment Page	F
Adjustment Address	68
Specified Value	f = 11.85 ± 0.05 MHz

Connection of Equipment

Connect the measuring device as shown in the following figure, and adjust.

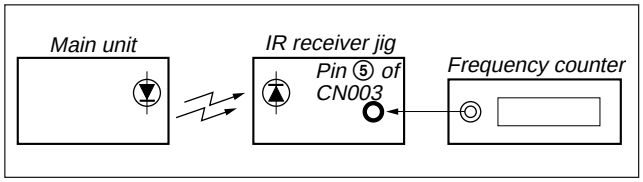

Fig. 5-3-15.

Adjusting method:

1) Select page: 0, address: 01, and set data: 01.
2) Select page: 2, address: 01, set data: 37, and press the PAUSE button of the adjustment remote commander.
3) Select page: F, address: 68, change the data, and set the video carrier frequency (f) to the specified value.
4) Press the PAUSE button of the adjustment remote commander.
5) Select page: 2, address: 01, set data: 00, and press the PAUSE button of the adjustment remote commander.
6) Select page: 0, address: 01, and set data: 00.

2. IR Video Deviation Adjustment (VC-214 board)

Mode	Camera standby
Subject	Arbitrary
Measurement Point	VIDEO OUT terminal of IR receiver jig (Terminated at 75Ω)
Measuring Instrument	Oscilloscope
Adjustment Page	F
Adjustment Address	66
Specified Value	A = 0.87 ± 0.04 V

Connection of Equipment

Connect the measuring device as shown in the following figure, and adjust.

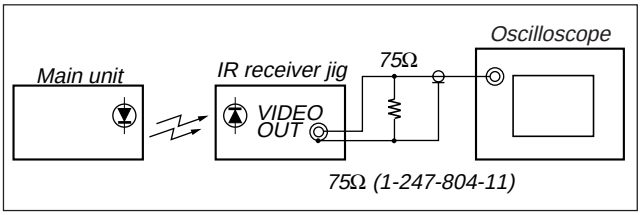

Fig. 5-3-16.

Adjusting method:

1) Select page: 0, address: 01, and set data: 01.
2) Select page: 2, address: 01, set data: 39, and press the PAUSE button of the adjustment remote commander.
3) Select page: F, address: 66, and change the data, set the video signal amplitude (A) to the specified value.
4) Press the PAUSE button of the adjustment remote commander.
5) Select page: 2, address: 01, set data: 00, and press the PAUSE button of the adjustment remote commander.
6) Select page: 0, address: 01, and set data: 00.

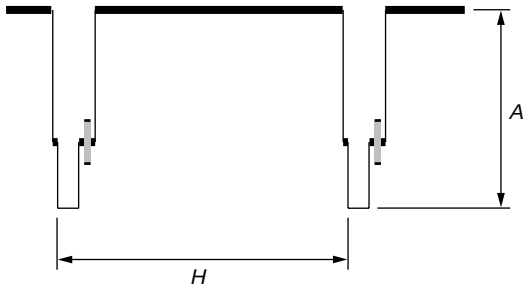

Fig. 5-3-17.

3. IR Audio Deviation Adjustment (VC-214 board)

Mode	VTR recording
Signal	Audio signal : 400Hz, –7.5dBs : L or R of AUDIO terminal Video signal : Color bar signal : VIDEO terminal
Measurement Point	AUDIO L terminal and AUDIO R terminal of IR receiver jig (Terminated at 47kΩ)
Measuring Instrument	Audio level meter
Adjustment Page	F
Adjustment Address	67
Specified Value	Signal level: –7.5 ± 2.0 dBs Level difference of L and R: Below 2dB

Connection of Equipment
Connect the measuring device as shown in the following figure, and adjust.

Adjusting method:
1) Select page: 0, address: 01, and set data: 01.
2) Connect the audio level meter to the AUDIO L terminal of the IR receiver jig.
3) Select page: F, address: 67, change the data and set the 400Hz audio signal level to the specified value.
4) Press the PAUSE button of the adjustment remote commander.
5) Connect the audio level meter to the AUDIO R terminal of the IR receiver jig.
6) Check that the 400Hz audio signal level is within the specified value. If outside, repeat from step 2).
7) Select page: 0, address: 01, and set data: 00.

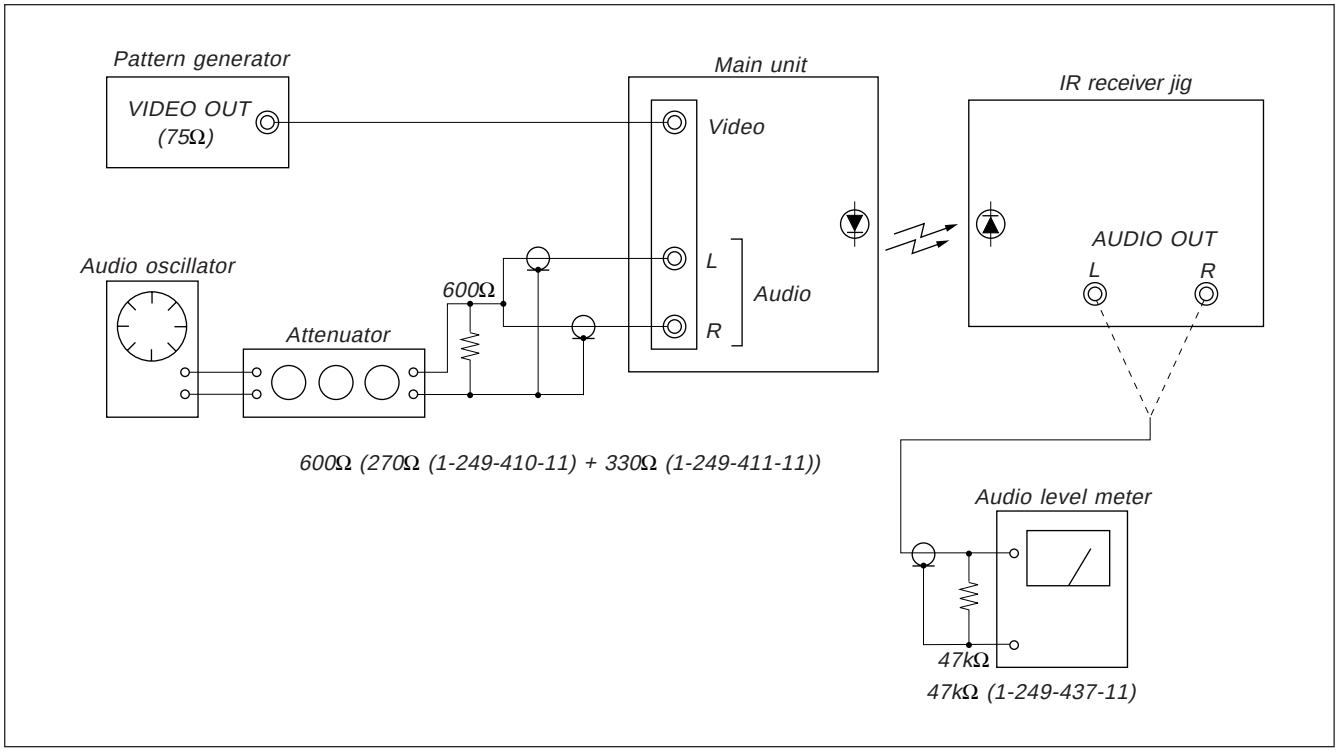

Fig. 5-3-18.

3-6. AUDIO SYSTEM ADJUSTMENT

- Perform the adjustment using color bar signal as a video signal input for the VIDEO terminal.
- The items to be adjusted for the R channel will be indicated within the [ ], in regard to the adjusting items to be adjusted for both L and R channels.
- Set the Hi-Fi sound switch in the menu display to “STEREO” position unless specified otherwise.

Note :

1) When inputting the audio signal, input same signal to both the L and R channels, unless otherwise.
2) Be sure insert the plug (Shorting plug or dummy plug, etc) into the AUDIO terminal (Right). If the plug is not inserted, the monaural mode will be set, and correct adjustments can not be carried out.
   [Monaural mode]
   During recording ..... REC AFM RF 1.7MHz carrier will not be output.
   During playback ..... The L + R signal will be output from the AUDIO terminal (Left).

[Connecting the measuring instruments for the audio]

Connect the audio system measuring instruments in addition to the video system measuring instruments as shown in Fig. 5-3-19, and perform adjustments at the power switch [VTR] position.

[Adjustment Procedure]

1) 1.5MHz deviation adjustment
2) 1.7MHz deviation adjustment
3) BPF adjustment

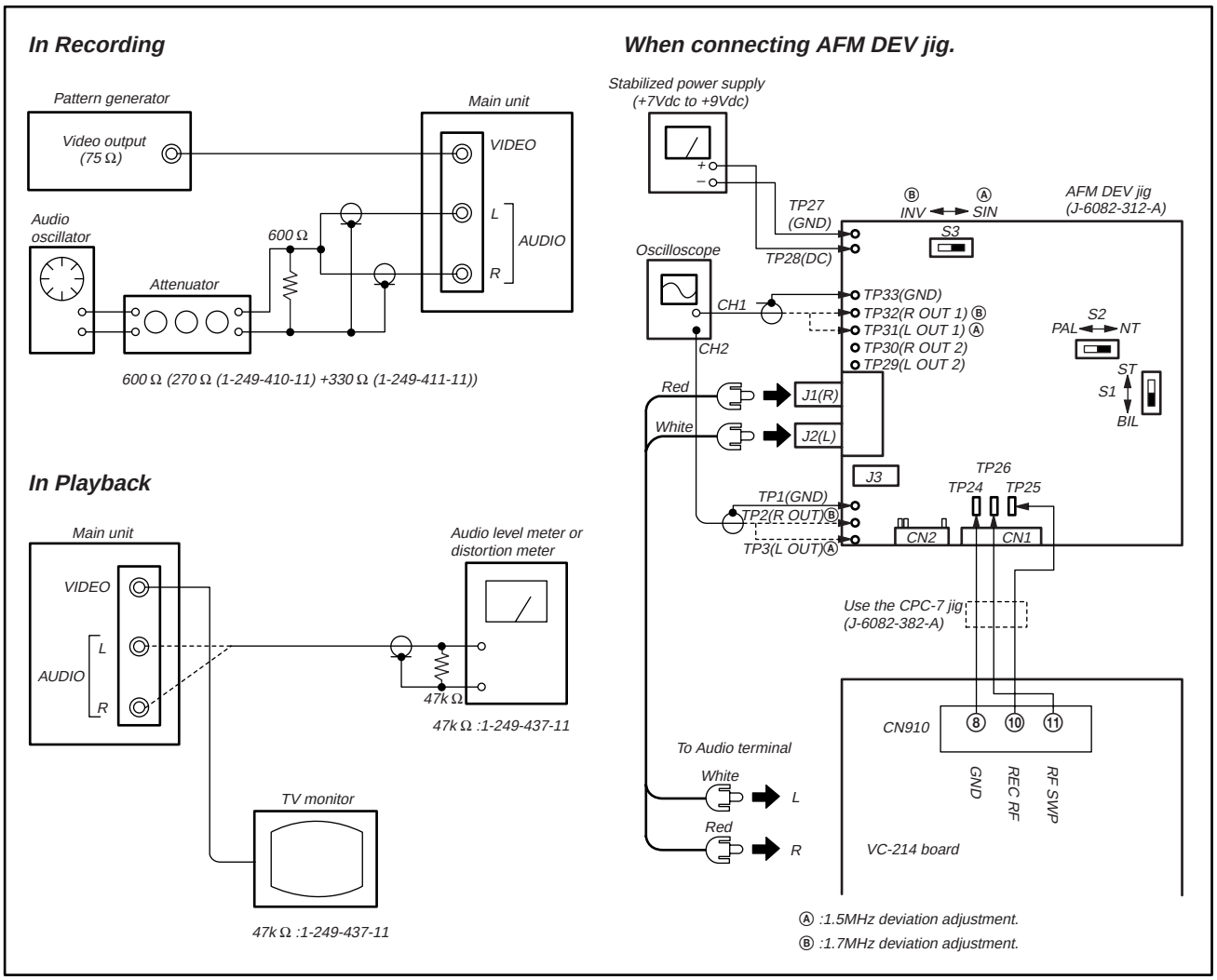

Fig. 5-3-19.

1. 1.5 MHz Deviation Adjustment (VC-214 board)

Sets the spectrum of the L-ch ((L+R)/2 signal) level modulated during recording. If deviated, the crosstalk signal of the audio signal will occur and the audio level will drop during both playback and recording.

Mode	VTR recording
Signal	Input the AFM DEV jig output signal to the left and right audio input terminal
Measurement Point	CH1: AFM DEV jig TP31 CH2: AFM DEV jig TP3
Measuring Instrument	Oscilloscope ADD mode CH2 INV mode
Adjustment Page	F
Adjustment Address	62
Specified Value	The level difference between CH1 signal and CH2 signal should be minimum.

Connection:

1) Connect TP24, TP25 and TP26 of the AFM DEV jig to CN910 of the VC-214 board.
   TP24(GND) ..... Pin ⑧ of CN910
   TP25(REC RF) ..... Pin ⑩ of CN910
   TP26(RF SWP) ..... Pin ⑪ of CN910
2) Connect the audio output terminal (J1 and J2) of the AFM DEV jig to AUDIO terminal of the unit.
3) Connect TP28(DC), TP27(GND) of the AFM DEV jig to the DC power supply (+7Vdc to +9Vdc).
4) Set the AFM DEV jig switches to the following positions.
   S1 ..... BIL Position
   S2 ..... NT Position
   S3 ..... SIN Position

Adjusting method :

1) Match the vertical ranges of CH1 and CH2 of the oscilloscope to each other.
2) Set the oscilloscope to the ADD mode and CH2 to the INV (invert) mode.
3) Select page: 0, address: 01, and set data: 01.
4) Select page: F, address: 62, change the data and minimize the audio signal level difference (A).
5) Press the PAUSE button of the adjustment remote commander.
6) Select page: 0, address: 01, and set data: 00.

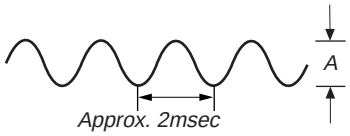

Fig. 5-3-20.

2. 1.7 MHz Deviation Adjustment (VC-214 board)

Sets the spectrum of the R-ch ((L-R)/2 signal) level modulated during recording. If deviated, the crosstalk signal of the audio signal will occur and the audio level will drop during both playback and recording.

Mode	VTR recording
Signal	Input the AFM DEV jig output signal to the left and right audio input terminal
Measurement Point	CH1: AFM DEV jig TP32 CH2: AFM DEV jig TP2
Measuring Instrument	Oscilloscope ADD mode CH2 normal mode
Adjustment Page	F
Adjustment Address	63
Specified Value	The level difference between CH1 signal and CH2 signal should be minimum.

Connection:

1) Connect TP24, TP25 and TP26 of the AFM DEV jig to CN910 of the VC-214 board.
   TP24(GND) ..... Pin ⑧ of CN910
   TP25(REC RF) ..... Pin ⑩ of CN910
   TP26(RF SWP) ..... Pin ⑪ of CN910
2) Connect the audio output terminal (J1 and J2) of the AFM DEV jig to AUDIO terminal of the unit.
3) Connect TP28(DC), TP27(GND) of the AFM DEV jig to the DC power supply (+7Vdc to +9Vdc).
4) Set the AFM DEV jig switches to the following positions.
   S1 ..... BIL Position
   S2 ..... NT Position
   S3 ..... INV Position

Adjusting method :

1) Match the vertical ranges of CH1 and CH2 of the oscilloscope to each other.
2) Set the oscilloscope to the ADD mode and CH2 to the normal mode.
3) Select page: 0, address: 01, and set data: 01.
4) Select page: F, address: 63, change the data and minimize the audio signal level difference (A).
5) Press the PAUSE button of the adjustment remote commander.
6) Select page: 0, address: 01, and set data: 00.

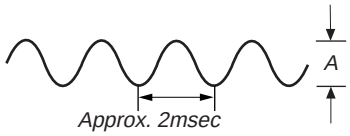

Fig. 5-3-21.

3. BPF f0 Adjustment (VC-214 board)

Sets the BPF passing frequency so that the AFM signal can separate from the playback RF signal properly. If deviated. the mono/stereo mode will be differentiated incorrectly, and noises and distortions will increase during high volume playback.

Mode	Playback
Signal	Alignment tape: For BPF adjustment (WR5-11NS)
Measurement Point	Audio output terminal left or right
Measuring Instrument	distortion meter
Adjustment Page	F
Adjustment Address	64
Specified Value	The Main and Sub channel distortion rate should be almost the same (within ± 1%) and minimum.

Adjusting method :

1) Select page: 0, address: 01, and set data: 01.
2) Set the Hi-Fi sound switch (menu display) to “2”.
3) Select page: F, address: 64, change the data and minimize the distortion rate.
4) Press the PAUSE button of the adjustment remote commander.
5) Set the Hi-Fi sound switch (menu display) to “1”.
6) Select page: F, address: 64, change the data and minimize the distortion rate.
7) Press the PAUSE button of the adjustment remote commander.
8) Repeat steps 2) to 7) and set the data of address: 64 so that the distortions rates when the Hi-Fi sound switch is set to “2” and set to “1” respectively are almost the same and minimum.
9) Press the PAUSE button of the adjustment remote commander.
10) Select page: 0, address: 01, and set data: 00.
11) Set the Hi-Fi sound switch to “STEREO”.

5-4. SERVICE MODE

4-1. ADJUSTMENT REMOTE COMMANDER

The adjustment remote commander is used for changing the calculation coefficient in signal processing, EVR data, etc. The adjustment remote commander performs bi-directional communication with the unit using the remote commander signal line (LANC). The resultant data of this bi-directional communication is written in the non-volatile memory.

1. Using the Adjustment Remote Commander

1) Connect the adjustment remote commander to the LANC terminal.
2) Set the HOLD switch of the adjustment remote commander to "HOLD" (SERVICE position). If it has been properly connected, the LCD on the adjustment remote commander will display as shown in Fig. 5-4-1.

Fig. 5-4-1.

3) Operate the adjustment remote commander as follows.
   - Changing the page
     The page increases when the EDIT SEARCH+ button is pressed, and decreases when the EDIT SEARCH– button is pressed. There are altogether 16 pages, from 0 to F.

Hexadecimal notation	0	1	2	3	4	5	6	7	8	9	A	B	C	D	E	F
LCD Display	0	1	2	3	4	5	6	7	8	9	A	b	c	d	E	F
Decimal notation conversion value	0	1	2	3	4	5	6	7	8	9	10	11	12	13	14	15

   - Changing the address
     The address increases when the FF (►►) button is pressed, and decreases when the REW (◄◄) button is pressed. There are altogether 256 addresses, from 00 to FF.
   - Changing the data (Data setting)
     The data increases when the PLAY (►) button is pressed, and decreases when the STOP (■) button is pressed. There are altogether 256 data, from 00 to FF.
   - Writing the adjustment data
     The PAUSE button must be pressed to write the adjustment data (D, E, F page) in the nonvolatile memory. (The new adjusting data will not be recorded in the nonvolatile memory if this step is not performed.)
4) After completing all adjustments, turn off the main power supply (8.4 V) once.

2. Precautions Upon Using the Adjustment Remote Commander

Mishandling of the adjustment remote commander may erase the correct adjustment data at times. To prevent this, it is recommended that all adjustment data be noted down before beginning adjustments and new adjustment data after each adjustment.

4-2. DATA PROCESS

The calculation of the DDS display and the adjustment remote commander display data (hexadecimal notation) are required for obtaining the adjustment data of some adjustment items. In this case, after converting the hexadecimal notation to decimal notation, calculate and convert the result to hexadecimal notation, and use it as the adjustment data. Indicates the hexadecimal-decimal conversion table.

Hexadecimal-decimal Conversion Table

Lower digit of hexadecimal / Upper digit of hexadecimal	0	1	2	3	4	5	6	7	8	9	A (A)	B (b)	C (C)	D (d)	E (E)	F (F)
0	0	1	2	3	4	5	6	7	8	9	10	11	12	13	14	15
1	16	17	18	19	20	21	22	23	24	25	26	27	28	29	30	31
2	32	33	34	35	36	37	38	39	40	41	42	43	44	45	46	47
3	48	49	50	51	52	53	54	55	56	57	58	59	60	61	62	63
4	64	65	66	67	68	69	70	71	72	73	74	77	76	77	78	79
5	80	81	82	83	84	85	86	87	88	89	90	91	92	93	94	95
6	96	97	98	99	100	101	102	103	104	105	106	107	108	109	110	111
7	112	113	114	115	116	117	118	119	120	121	122	123	124	125	126	127
8	128	129	130	131	132	133	134	135	136	137	138	139	140	141	142	143
9	144	145	146	147	148	149	150	151	152	153	154	155	156	157	158	159
A (A)	160	161	162	163	164	165	166	167	168	169	170	171	172	173	174	175
① B (b)	176	177	178	179	180	181	182	183	184	185	186	187	188	189	190	191
C (C)	192	193	194	195	196	197	198	199	200	201	202	203	204	205	206	207
D (d)	208	209	210	211	212	213	214	215	216	217	218	219	220	221	222	223
E (E)	224	225	226	227	228	229	230	231	232	233	234	235	236	237	238	239
F (F)	240	241	242	243	244	245	246	247	248	249	250	251	252	253	254	255

② (column header)

Note: The characters shown in the parenthesis ( ) shown the display on the adjustment remote commander.

(Example) If the DDS display or the adjustment remote commander shows BD (bd);
Because the upper digit of the adjustment number is B (b), and the lower digit is D (d), the meeting point "189" of ① and ② in the above table is the corresponding decimal number.

Table. 5-4-1.

4-3. SERVICE MODE

Note: After the completion of the all adjustments, cancel the service mode by either of the following ways.

1) Unplug the main power supply and remove the lithium battery. (In this case, date and time and menu setting have been set by users are canceled. Perform resetting.)
2) After data on page: D and F is restored, return data of the address: 01 on page: 0 to 00. And when data on page: 2 is changed, return the data to the original condition.

1. Test Mode Setting

Set/release each test mode. Set page: 0, address: 01, data: 01 before setting the data of page D and F.

Page F	Address 2C

Data	Function
00	Normal
01	Test mode Various emergency prohibitions and releases Drum emergency, capstan emergency, loading motor emergency, reel emergency, tape top and end, DEW detection

Page D	Address 10

Data	Function
00	Normal
01	Camera power ON
02	VTR power ON
03	Camera + VTR power ON

* For page D and F, the data set will be recorded in the nonvolatile memory by pressing the PAUSE button on the adjustment remote commander. Take note that, in this case, the test mode will not be released even if the main power has been turned off.

* Be sure to return this address data to 00 after completing adjustments/repairs and press the PAUSE button of the adjustment remote commander. And set page: 0, address: 01, data: 00.

2. Emergency Memory Address

Page F	Address 10 to 1B

Address	Contents
10	1st EMG code
12	Upper: MSW code when the mechanism starts shifting the 1st time Lower: MSW code when the 1st emergency occurs
13	Lower: Target MSW code of the 1st emergency occurs
14	2nd EMG code
16	Upper: MSW code when the mechanism starts shifting the 2nd time Lower: MSW code when the 2nd emergency occurs
17	Lower: Target MSW code of the 2nd emergency occurs
18	Last EMG code
1A	Upper: MSW code when the mechanism starts shifting the last time Lower: MSW code when the last emergency occurs
1B	Lower: Target MSW code of the last emergency occurs

When there are no emergency, data 00 will be written in the above addresses (10 to 1B). When the first emergency occurs, the data corresponding to the emergency will be written in the address (10 to 13) for this first emergency. In the same way, when the second emergency occurs, the data corresponding to the emergency will be written in the address (14 to 17) for this second emergency.
The data corresponding to the emergency occurring the last will be written in the address (18 to 1B) for this last emergency.
Therefore the data of addresses 18 to 1B are renewed each time an emergency occurs.

Note 1: Be sure to rewrite the data of addresses 10 to 1B to 00 after repairs/adjustments.
Note 2: When rewriting the data, be sure to press the PAUSE button of the remote commander after setting the data.

2-1. EMG code (Emergency code)

The codes shown in the following table which correspond to errors that occur are recorded in addresses 10, 14, and 18.

Code	Type of Emergency
00	No error
10	Loading motor time-out during load
11	Loading motor time-out during unload
20	T reel emergency (reel slack) during unloading
21	S reel emergency (reel slack) during unloading
22	T reel emergency
23	S reel emergency
30	FG emergency at the start up of the capstan
31	FG emergency during the normal rotation of the capstan
40	FG emergency at the start up of the drum
41	PG emergency at the start up of the drum
42	FG emergency during the normal rotation of the drum
43	PG emergency during the normal rotation of the drum
44	Phase emergency during the normal rotation of the drum

2-2. MSW codes

- The lower parts of the data of addresses 12, 16 and 1A represent the MSW codes (mode switch, mechanism position) when errors occurs.
- The upper parts of the data of addresses 12, 16 and 1A represent, when the mechanism position is to be moved, the MSW codes at the start of movement (when moving the loading motor).
- The lower parts of the data of addresses 13, 17 and 1B represent the MSW codes of the desired movement when the mechanism position is to be moved.

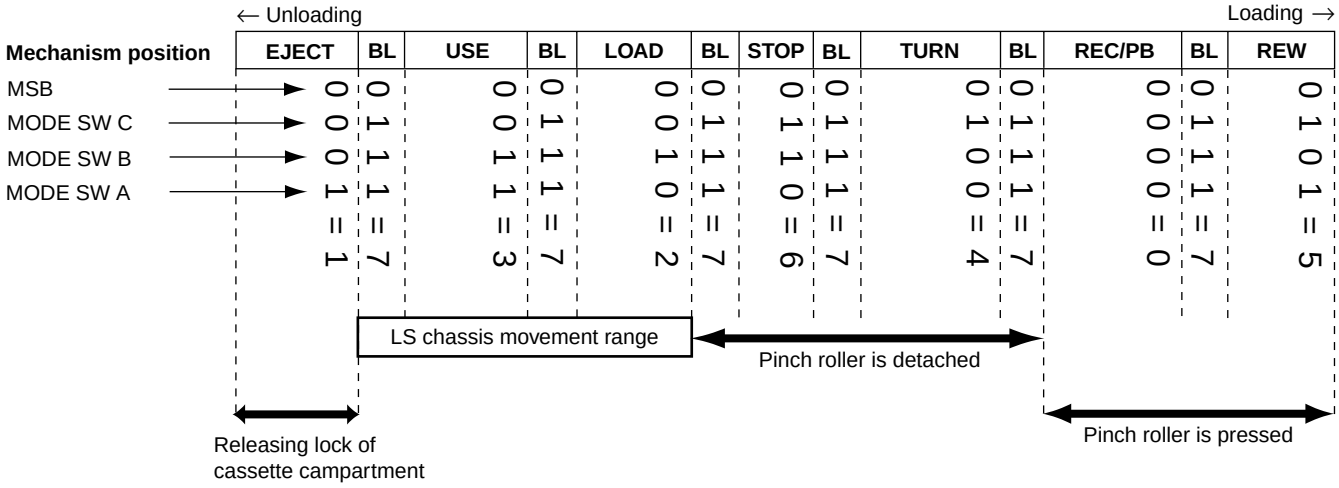

Mechanism Position	MSW Code	Contents
EJECT	1	Position at which the cassette compartment lock is released. The mechanism will not move any further in the unloading direction.
BL	7	BLANC code. Between two codes. The mechanism will not be stopped by this code while it is operating.
USE	3	EJECT completion position. When the cassette is ejected, the mechanism will stop at this position.
LOAD	2	Code during loading/unloading. Code that is used while the LS chassis is moving.
STOP	6	Normal stop position. The pinch roller separates, the tension regulator returns, and the brakes of both reels turn on.
TURN	4	Position at which is used when the pendulum gear swings from S to T or from T to S.
RECP/PB	0	PB, REC, CUE, REV, PAUSE, FF positions. The pinch roller is pressed and tension regulator is on.
REW	5	REW position. REW are carried at this position. The mechanism will not move any further in the loading direction.

3. Bit Value Discrimination

Bit values must be discriminated using the display data of the adjustment remote commander for the following items. Us the table below to discriminate if the bit value is “1” or “0”.

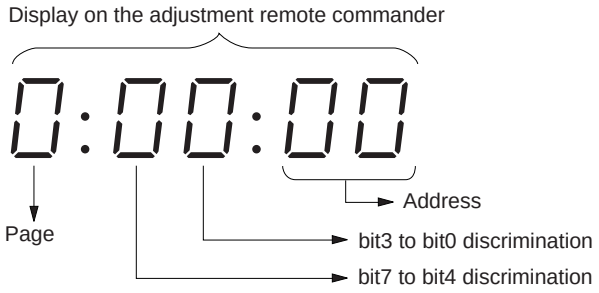

(Example) If the remote commander display is “8E”, bit value from bit 7 to bit 4 can be discriminated from the column Ⓐ, and those from bit 3 to bit 0 from column Ⓑ.

	Display on the adjustment remote commander	Bit values			
		bit3 or bit7	bit2 or bit6	bit1 or bit5	bit0 or bit4
	0	0	0	0	0
	1	0	0	0	1
	2	0	0	1	0
	3	0	0	1	1
	4	0	1	0	0
	5	0	1	0	1
	6	0	1	1	0
	7	0	1	1	1
Ⓐ	8	1	0	0	0
	9	1	0	0	1
	A (A)	1	0	1	0
	B (b)	1	0	1	1
	C (C)	1	1	0	0
	D (d)	1	1	0	1
Ⓑ	E (E)	1	1	1	0
	F (F)	1	1	1	1

4. Input/output selection check

Page 2	Address 49

Bit	Function	When bit value = 1	When bit value = 0
0			
1			
2			
3			
4	MIC jack	MIC jack is used	
5	AUDIO terminal	Monaural	Stereo
6	VIDEO terminal	VIDEO terminal is used	
7	S VIDEO terminal		S VIDEO terminal is used

Using method:

1) Select page: 2, address: 49.
2) By discriminating the bit value of display data, the state of the input/output selection can be discriminated.

5. LED, LCD (display window) check

Page 2	Address 05	Bit5

Using method:

1) Select page: 2, address: 05, and set the bit value of Bit5 to “1”.
2) Check that all LED are lit and all segments of LCD (display window) are lit.
3) Select page: 2, address: 05, and set the bit value of Bit5 to “0”.

6. Record of Use check

Page 2	Address A2 to AA

Bit	Function		Remarks
A2	Drum rotation	Hour (H)	1000th place digit and 100th place digit of counted time (decimal digit)
A3	counted time	Hour (L)	10th place digit and 1st place digit of counted time (decimal digit)
A4	(BCD code)	Minute	
A5	User initial power	Year	After setting the clock, set the date of power on next
A6	on date	Month	
A7	(BCD code)	Day	
A8	Final condensation	Year	
A9	occurrence date	Month	
AA	(BCD code)	Day	

Using method:

1) The record of use data is displayed at page: 2, addresses: A2 to AA.
   Note: This data will be erased when the coin lithium battery (CF-56 board BH001) is removed (reset).

7. Switch check (1)

Page 2	Address 43

Bit	Function	When bit value = 1	When bit value = 0
0	VTR MODE SW (MA-351 board S302)	OFF	ON
1	CAM MODE SW (MA-351 board S303)	OFF	ON
2	START/STOP SW (SS-8500 block S002)	OFF	ON
3	EJECT SW (SS-8500 block S003)	OFF	ON
4	CC DOWN SW (Mechanism chassis)	OFF (UP)	ON (DOWN)
5	PHOTO FREEEZE SW (FP-49 flexible)	OFF	ON
6			
7			

Using method:

1) Select page: 2, address: 43.
2) By discriminating the bit value of display data, the state of the switches can be discriminated.

8. Switch check (2)

Page 2	Address 60 to 66

Using method:

1) Select page: 2, address: 60 to 66.
2) By discriminating the display data, the pressed key can be discriminated.

Address	Data							
	00 to 0B	0C to 23	24 to 3E	3F to 5C	5D to 80	81 to AA	AB to DE	DF to FF
60 (KEY AD0) (IC604 ⑨③)	LASER LINK (FK-8500 block) (S008)	STOP (FK-8500 block) (S001)	FF (FK-8500 block) (S003)	REC (FK-8500 block) (S005, 007)	EDIT SEARCH (+) (FK8500 S009)	EDIT SEARCH (–) (FK8500 S010)		No key input
61 (KEY AD1) (IC604 ⑨④)	PHOTO REC (FP-49 flexible)	PAUSE (FK-8500 block) (S002)	REW (FK-8500 block) (S004)	PLAY (FK-8500 block) (S006)				No key input
62 (KEY AD2) (IC604 ⑨⑤)	DIGITAL EFFECT (CF-56 board) (S001)	PICTURE EFFECT (CF-56 board) (S006)	MENU (CF-56 board) (S010)	EXECUTE (CF-56 board) (S015)	TIME (CF-56 S021)	5sec REC (CF-56 board) (S024)	PUSHING REC (CF-56 board) (S024)	NORMAL REC (CF-56 board) (S024)
64 (KEY AD4) (IC604 ⑨⑦)			EXPOSURE (CF-56 S012)	BACK LIGHT (CF-56 S017)	FADER (CF-56 board) (S027)	FOCUS INFINITY (MR-8500 block) (S001)	FOCUS AUTO (MR-8500 block) (S001)	FOCUS MANUAL (MR-8500 block) (S001)
65 (KEY AD5) (IC604 ⑨⑧)	DATE (CF-56 board) (S003)	COUNTER RESET (CF-56 board) (S008)	END SEARCH (CF-56 board) (S013)	TITLE (CF-56 board) (S018)	DISPLAY (CF-56 board) (S022)		SUPER NIGHT SHOT (FP-62 flexible)	No key input
66 (KEY AD6) (IC604 ⑨⑨)	PROGRAM AE (CF-56 board) (S004)	BRIGHT(+) (PD-105 board) (S5801)	BRIGHT(–) (PD-105 board) (S5802)	VOLUME(+) (PD-105 board) (S5803)	VOLUME(–) (PD-105 board) (S5804)	PANEL REVERSE (FP-642 flexible)	PANEL CLOSE (FP-642 flexible)	PANEL NORMAL (FP-642 flexible)

9. Headphone jack check

Page 2	Address 45

Bit	Function	When bit value = 1	When bit value = 0
1	Headphone jack	Headphone jack is used	

Using method:

1) Select page: 2, address: 45.
2) By discriminating the bit value of display data, the state of the headphone jack can be discriminated.

SECTION 6
REPAIR PARTS LIST

6-1. EXPLODED VIEWS

NOTE:

- -XX, -X mean standardized parts, so they may have some differences from the original one.
- Items marked "*" are not stocked since they are seldom required for routine service. Some delay should be anticipated when ordering these items.
- The mechanical parts with no reference number in the exploded views are not supplied.
- Abbreviation
  CND : Canadian model
  HK : HongKong model
  BR : Brazilian model

The components identified by mark ⚠ or dotted line with mark ⚠ are critical for safety. Replace only with part number specified.

Les composants identifiés par une marque ⚠ sont critiques pour la sécurité. Ne les remplacer que par une pièce portant le numéro spécifié.

6-1-1. FRONT PANEL (D) BLOCK AND BATTERY PANEL (P) BLOCK ASSEMBLY

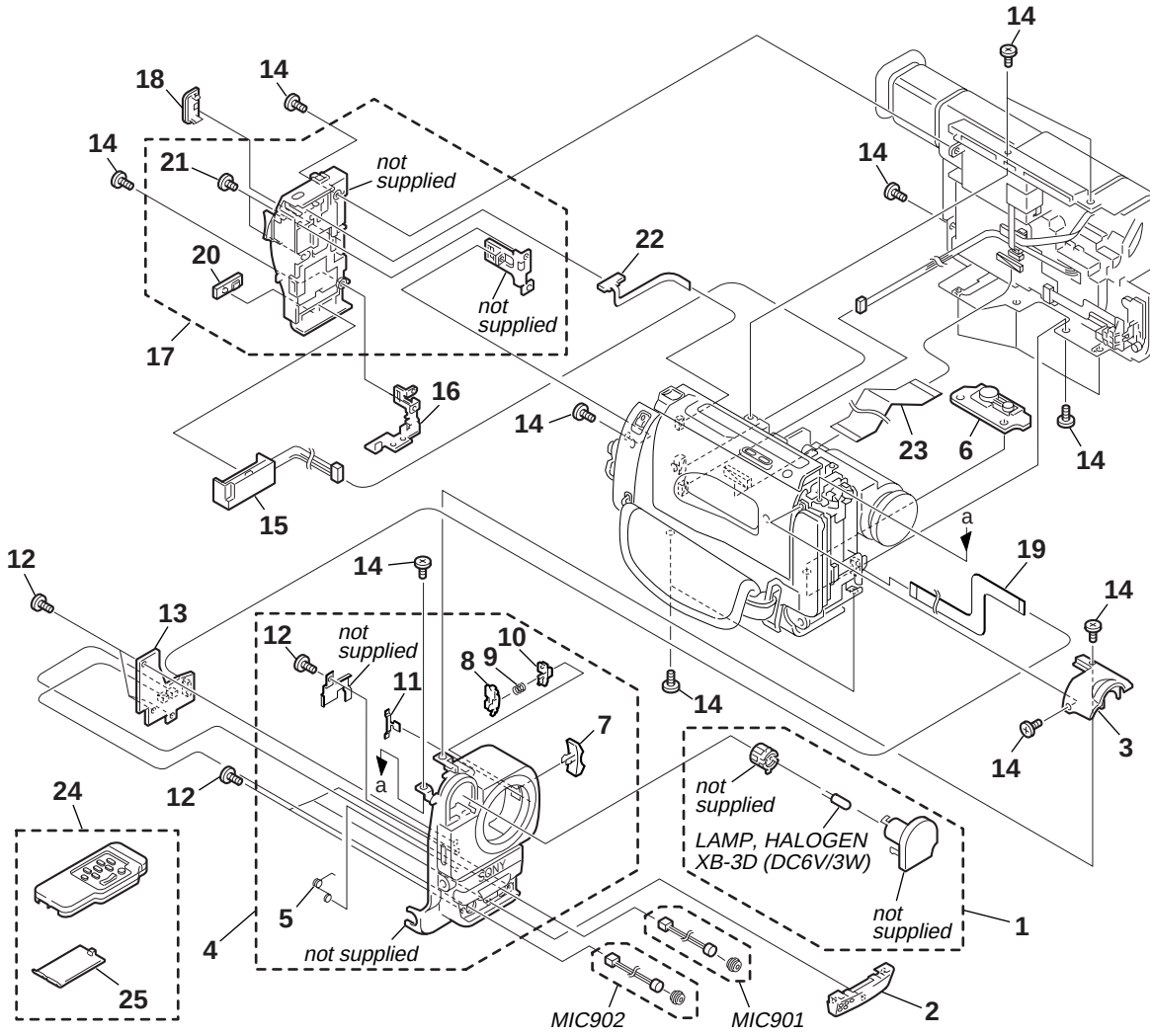

Ref. No.	Part No.	Description	Remarks
1	1-517-857-11	LIGHT, VIDEO	
2	X-3949-326-1	GRILLE (D) ASSY, MICROPHONE	
3	3-053-603-01	CABINET (L), SHOE	
4	X-3949-322-1	PANEL (D) ASSY, FRONT	
5	3-987-882-01	SPRING, TORSION	
6	3-987-717-01	SCREW	
7	3-987-631-01	KNOB, P	
8	3-053-596-01	HOLDER (D), P KNOB	
9	3-973-619-01	SPRING, COMPRESSION	
10	3-053-597-01	BUTTON (D), LOCK	
11	3-987-642-01	SPRING, CLICK	
12	3-948-339-61	TAPPING	
13	A-7073-840-A	MA-351 (IB) BOARD, COMPLETE	
14	3-968-729-01	SCREW (M2), LOCK ACE, P2	
15	1-694-384-11	TERMINAL BOARD, BATTERY	

Ref. No.	Part No.	Description	Remarks
16	3-053-723-01	SHEET METAL (LOWER), STRAP	
17	X-3949-336-1	PANEL ASSY (P), BATTERY (TRV63/TRV66:US,CND,E,HK/TRV66PK)	
17	X-3949-489-1	PANEL ASSY (B), BATTERY (TRV66:BR)	
18	3-975-752-01	LID (BT), CPC	
19	1-672-670-11	FP-43 FLEXIBLE BOARD	
20	3-987-656-01	LID, JACK	
21	3-968-729-61	SCREW (M2X3), LOCK ACE, P2	
22	1-672-663-21	FP-49 FLEXIBLE BOARD	
23	1-783-240-11	CABLE, FLEXIBLE FLAT (FFC-236)	
24	1-467-574-21	REMOTE COMMANDER (RMT-708)	
25	3-958-131-01	LID, BATTERY CASE (for RMT-708)	
MIC901	1-542-312-11	MICROPHONE	
MIC902	1-542-312-11	MICROPHONE	

6-1-2. CABINET (R) BLOCK ASSEMBLY

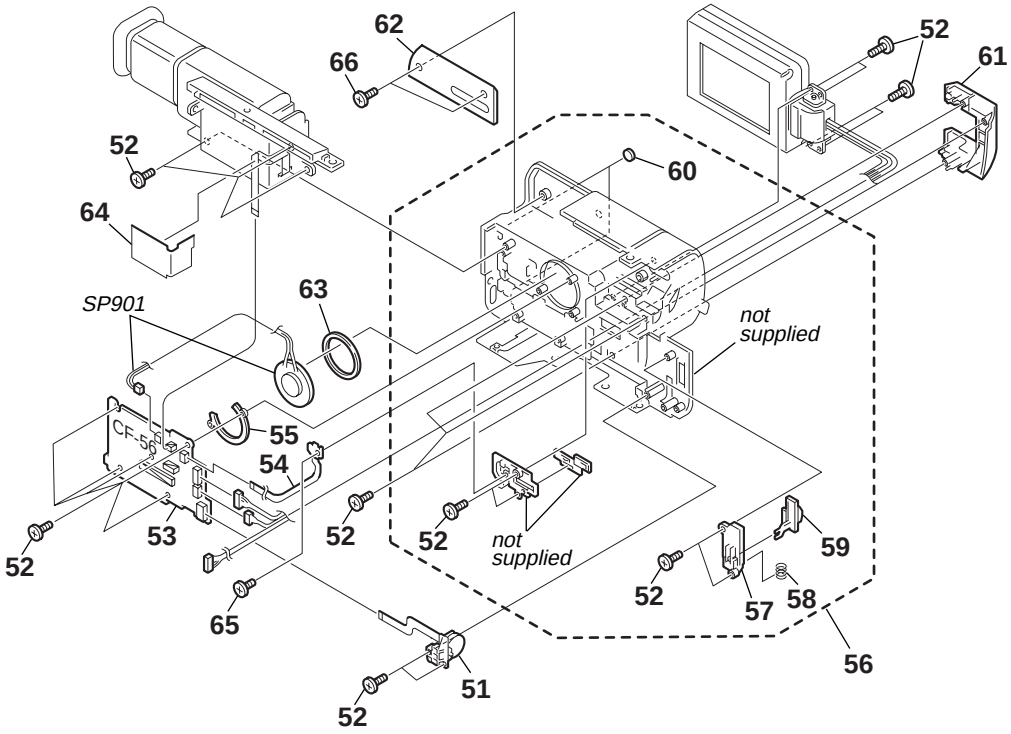

Ref. No.	Part No.	Description	Remarks
51	1-475-621-11	SWITCH BLOCK, CONTROL(MR-8500)	
52	3-948-339-61	TAPPING	
53	A-7073-841-A	CF-56 BOARD, COMPLETE	
54	1-672-668-21	FP-62 FLEXIBLE BOARD	
* 55	3-053-783-01	RETAINER (93), SPEAKER	
56	X-3949-334-1	CABINET (R) ASSY (93)	
57	3-053-690-01	RETAINER (93), MF	
58	3-568-315-01	SPRING, COMPRESSION	
59	3-053-689-01	KNOB (93), MF	

Ref. No.	Part No.	Description	Remarks
60	3-959-978-02	CUSHION, PANEL	
61	3-053-706-01	COVER (R) (93), HINGE	
62	3-053-684-01	GUIDE (B) (93), TILT	
63	3-965-367-01	SPACER, SP	
64	3-053-683-01	GUIDE, HARNESS	
65	3-713-791-01	SCREW (M1.7X4), TAPPING, P2	
66	3-948-339-01	SCREW, TAPPING	
SP901	1-504-753-41	SPEAKER (2.8CM)	

6-1-3. LCD BLOCK ASSEMBLY

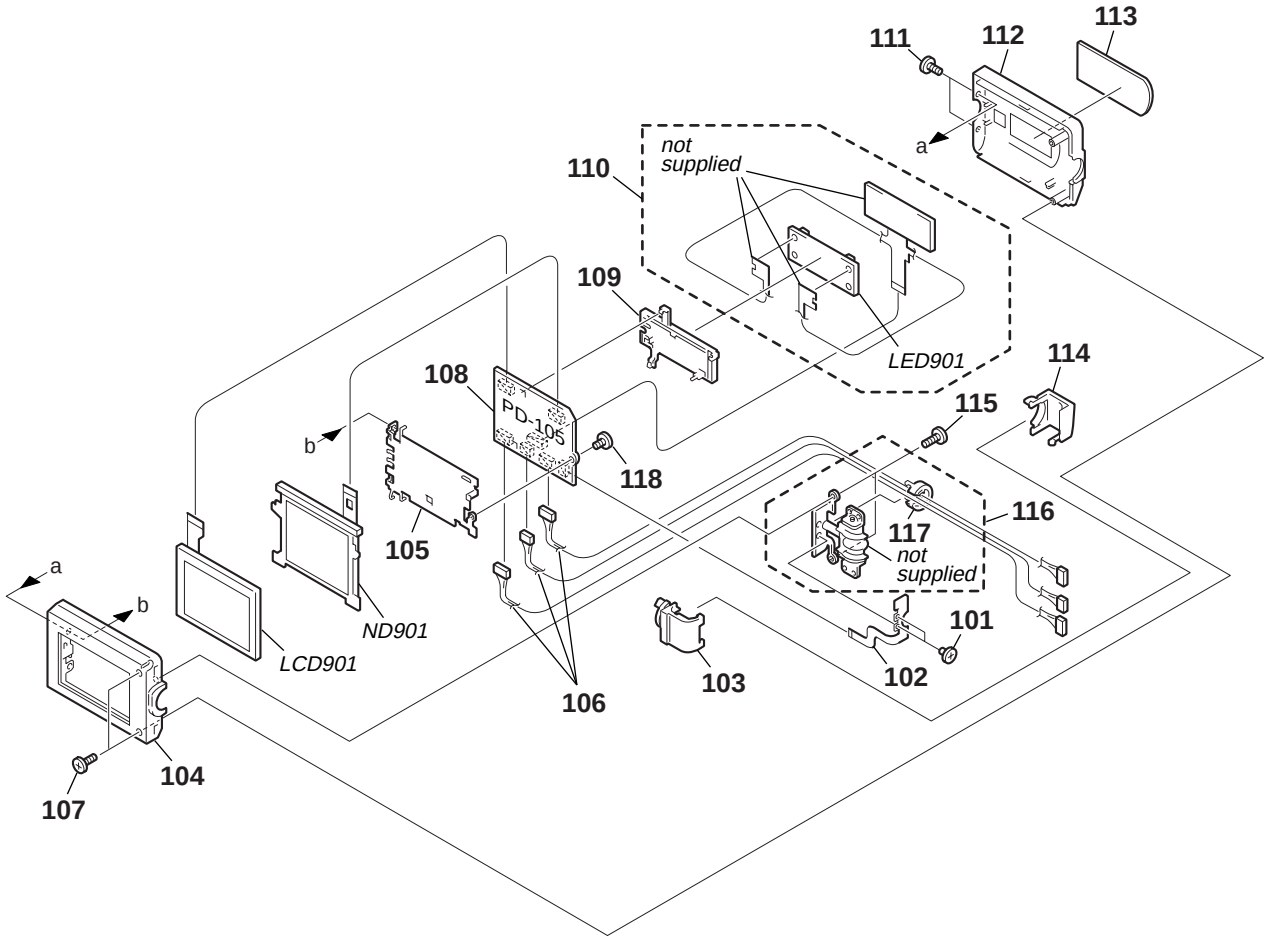

Ref. No.	Part No.	Description	Remarks
101	4-981-286-01	SCREW (M1.7X2) (IB LOCK)	
102	1-668-963-21	FP-642 FLEXIBLE BOARD	
103	3-987-625-11	COVER (M), HINGE	
104	X-3949-335-7	CABINET (M (93)) ASSY, P	
105	X-3949-385-1	FRAME (93) ASSY, PANEL	
106	1-959-310-11	HARNESS (DP-74)	
107	3-948-339-01	SCREW, TAPPING	
108	A-7073-842-A	PD-105 BOARD, COMPLETE	
109	3-053-702-01	HOLDER (93), LCD	
110	A-7094-150-A	INDICATION LCD BLOCK ASSY	
111	3-968-729-01	SCREW (M2), LOCK ACE, P2	
112	3-053-695-01	CABINET (C) (93), P (TRV66/TRV66PK)	
112	3-053-695-11	CABINET (C) (93), P (TRV63)	
113	3-053-703-01	WINDOW (93), LCD (TRV66/TRV66PK)	
113	3-053-703-21	WINDOW (93), LCD (TRV63)	
114	3-053-707-01	COVER (C) (93), HINGE	
115	3-948-339-11	SCREW, TAPPING	
116	X-3948-169-7	HINGE ASSY	
117	3-987-623-01	CLAMP, HARNESS	
118	3-713-786-21	SCREW (M2X3)	
LCD901	1-803-356-21	MODULE, CRYSTAL INDICATION	
⚠LED901	1-517-858-11	LIGHT, BACK	
⚠ND901	1-517-751-11	TUBE, FLUORESCENT,COLD CATHODE	

Note :	**Note :**
The components identified by mark ⚠ or dotted line with mark ⚠ are critical for safety. Replace only with part number specified.	Les composants identifiés par une marque ⚠ sont critiques pour la sécurité. Ne les remplacer que par une pièce portant le numéro spécifié.

6-1-4. CABINET (L) BLOCK AND MAIN BOARDS ASSEMBLY

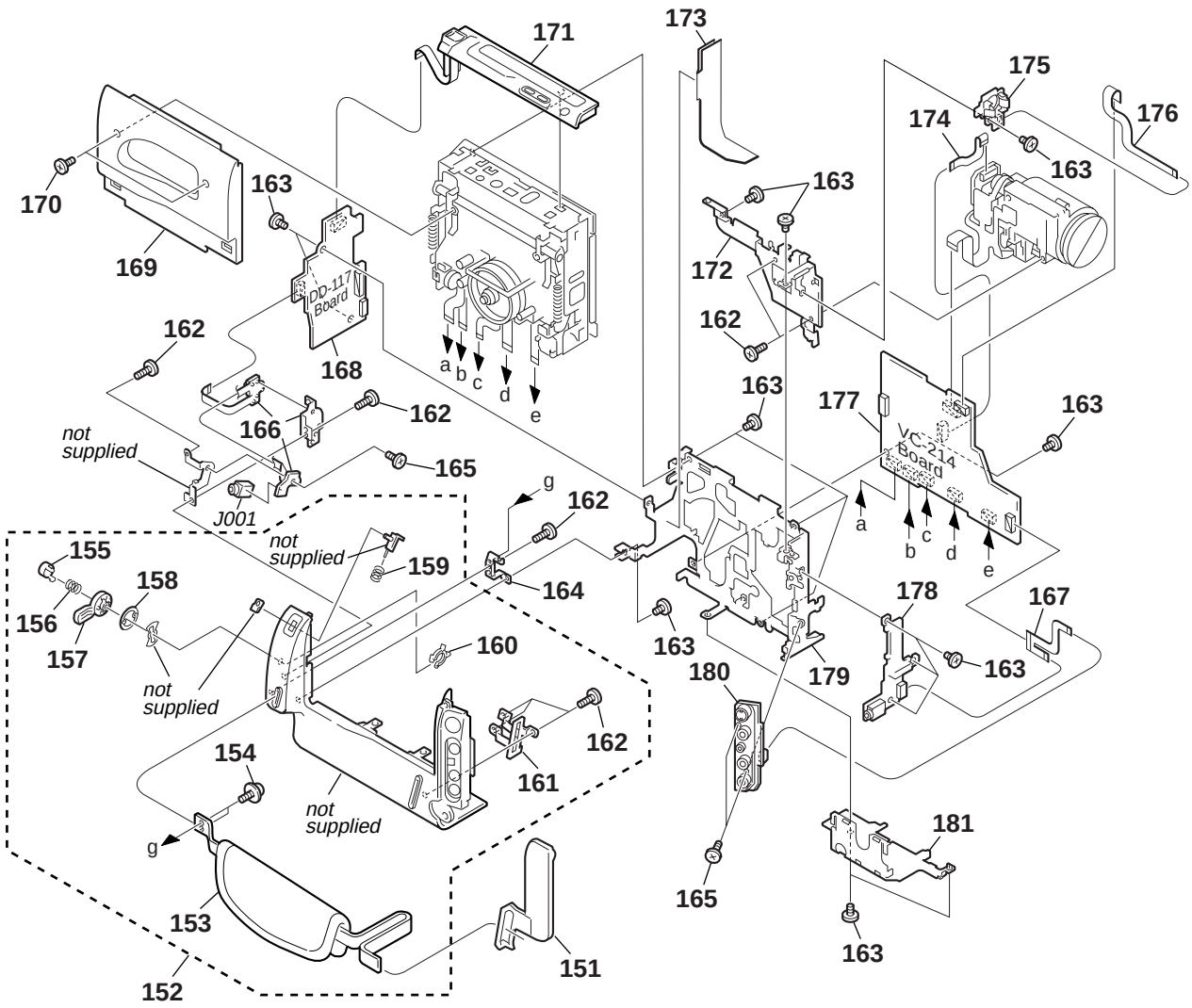

Ref. No.	Part No.	Description	Remarks
* 151	3-975-522-11	COVER, JACK	
152	X-3948-315-1	CABINET (L) ASSY	
153	3-052-815-01	BELT (ES), GRIP	
154	3-679-362-11	SCREW	
155	3-960-566-01	BUTTON, S/S	
156	3-302-492-00	SPRING, COMPRESSION	
157	3-969-081-01	KNOB, STAND-BY	
158	3-970-854-01	SPRING, STAND-BY	
159	3-979-642-01	SPRING, COMPRESSION	
160	3-949-192-01	HOLDER, STAND-BY KNOB	
161	3-975-966-01	SHEET METAL (2), SS	
162	3-948-339-61	TAPPING	
163	3-713-786-21	SCREW (M2X3)	
* 164	3-975-532-01	HOLDER, EL	
165	3-968-729-01	SCREW (M2), LOCK ACE, P2	
166	1-475-619-11	SWITCH BLOCK, CONTROL(SS-8500)	
167	1-672-671-11	FP-44 FLEXIBLE BOARD	
168	A-7073-835-A	DD-117 (VIB) BOARD, COMPLETE	
169	X-3947-199-1	LID ASSY, CASSETTE (TRV63/TRV66:US,CND)	
169	X-3948-331-1	LID ASSY, CASSETTE (TRV66:E,HK,BR/TRV66PK)	
170	3-968-729-81	SCREW (M2), LOCK ACE, P2	
171	1-475-618-41	SWITCH BLOCK, CONTROL(FK-8500)	
* 172	3-053-742-01	FRAME (L), LENS	
* 173	3-053-745-01	PROTECTOR, LS FLEXIBLE	
174	1-672-665-11	FP-54 FLEXIBLE BOARD	
175	A-7073-832-A	VL-23 BOARD, COMPLETE	
176	1-672-673-11	FP-46 FLEXIBLE BOARD	
177	A-7094-199-A	VC-214 (VIBU) BOARD, COMPLETE (SERVICE ASSY)	
178	A-7073-836-A	SE-83 (M) BOARD, COMPLETE	
179	3-053-743-01	FRAME (A), MD	
180	A-7073-837-A	PJ-92 BOARD, COMPLETE	
181	3-987-675-01	FRAME (B), MD	
J001	1-565-276-31	JACK, ULTRA SMALL 1P (LANC)	

6-1-5. EVF BLOCK ASSEMBLY

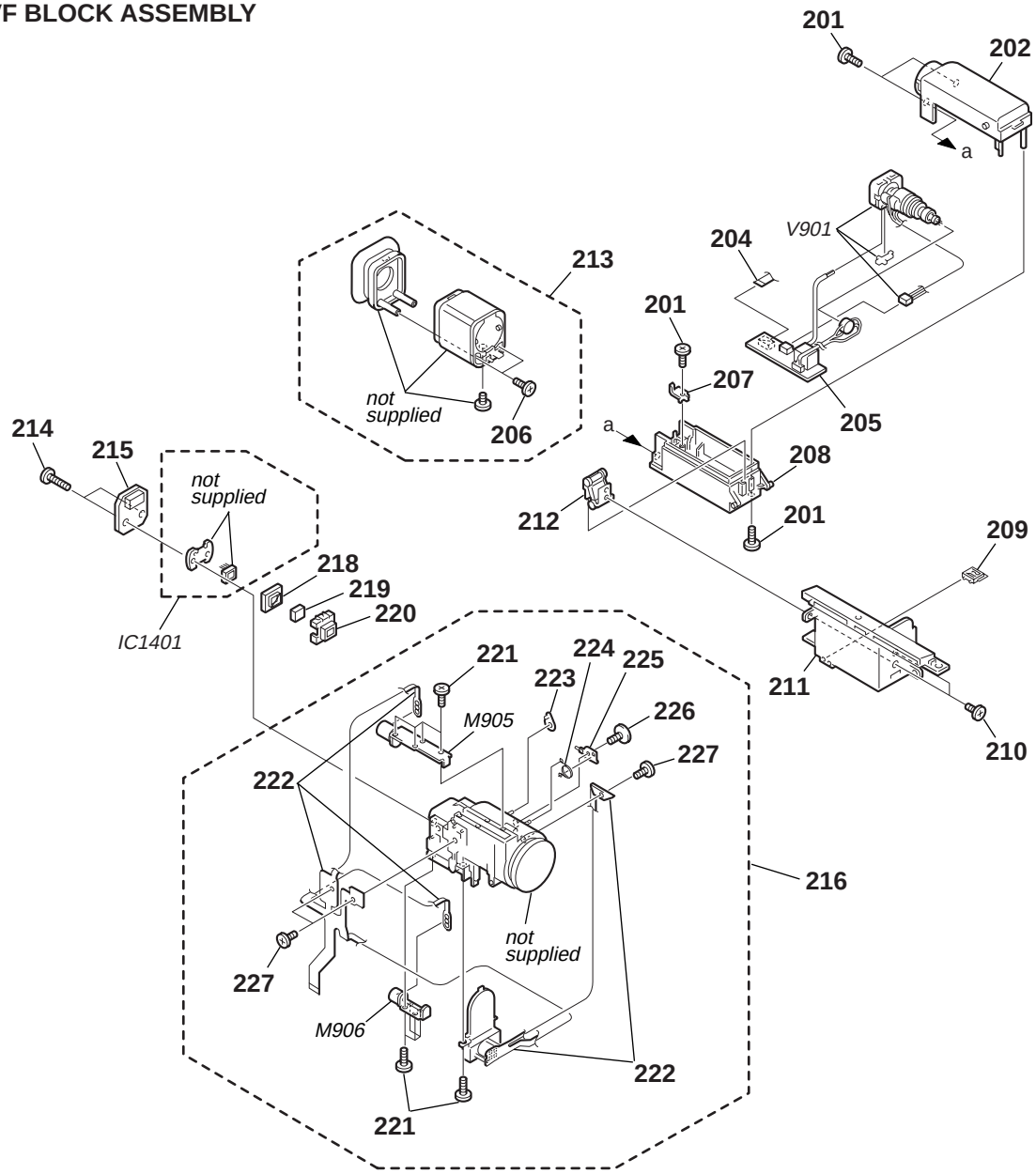

Be sure to read “Precautions upon replacing CCD imager” on page 4-9 when changing the CCD imager.

Ref. No.	Part No.	Description	Remarks
201	3-948-339-01	SCREW, TAPPING	
202	X-3949-328-1	CABINET (UPPER B) (93) ASSY	
204	1-790-412-11	CABLE, FLEXIBLE FLAT (FFC-256)	
205	A-7073-838-A	VF-129 (SSGE-N) BOARD, COMPLETE	
206	3-948-339-61	TAPPING	
207	3-053-681-01	TALLY, EVF	
208	3-053-679-01	CABINET (LOWER B) (93), EVF	
209	3-053-685-01	LOCK (93), TILT	
210	3-713-786-21	SCREW (M2X3)	
211	3-053-682-01	BASE (B) (93), VF	
212	X-3949-327-1	ARM (B) ASSY, CRANK	
213	X-3949-329-1	FINDER (S) ASSY	
214	3-318-203-11	SCREW (B1.7X6), TAPPING	
215	A-7073-834-A	CD-209 BOARD, COMPLETE	
216	8-848-729-01	DEVICE, LENS LSV-630A	

Ref. No.	Part No.	Description	Remarks
218	3-968-054-11	RUBBER (FM), SHIELD	
219	1-758-084-21	FILTER BLOCK, OPTICAL	
220	3-978-981-11	ADAPTOR (FK), CCD FITTING	
221	3-713-791-41	SCREW, TAPPING (M1.7X5), P2	
222	X-3949-355-1	IRIS FLEXIBLE ASSY 630(N)	
223	3-053-799-01	GEAR, IR	
224	3-053-800-01	SPRING, RETAIN	
225	3-053-827-01	LEVER, IR	
226	3-053-853-01	SCREW, TAPPING (M1.7X4)	
227	3-713-791-51	SCREW, TAPPING (M1.7X3.5), P2	
IC1401	A-7030-865-A	CCD BLOCK ASSY (CCD IMAGER)	
M905	1-763-262-11	MOTOR, FOCUS STEPPING	
M906	1-763-046-11	MOTOR, ZOOM STEPPING	
⚠V901	1-452-673-61	CRT ASSY (M01KXX90WB)	

Note :
The components identified by mark ⚠ or dotted line with mark ⚠ are critical for safety.
Replace only with part number specified.

Note :
Les composants identifiés par une marque ⚠ sont critiques pour la sécurité.
Ne les remplacer que par une pièce portant le numéro spécifié.

6-1-6. CASSETTE COMPARTMENT ASSEMBLY

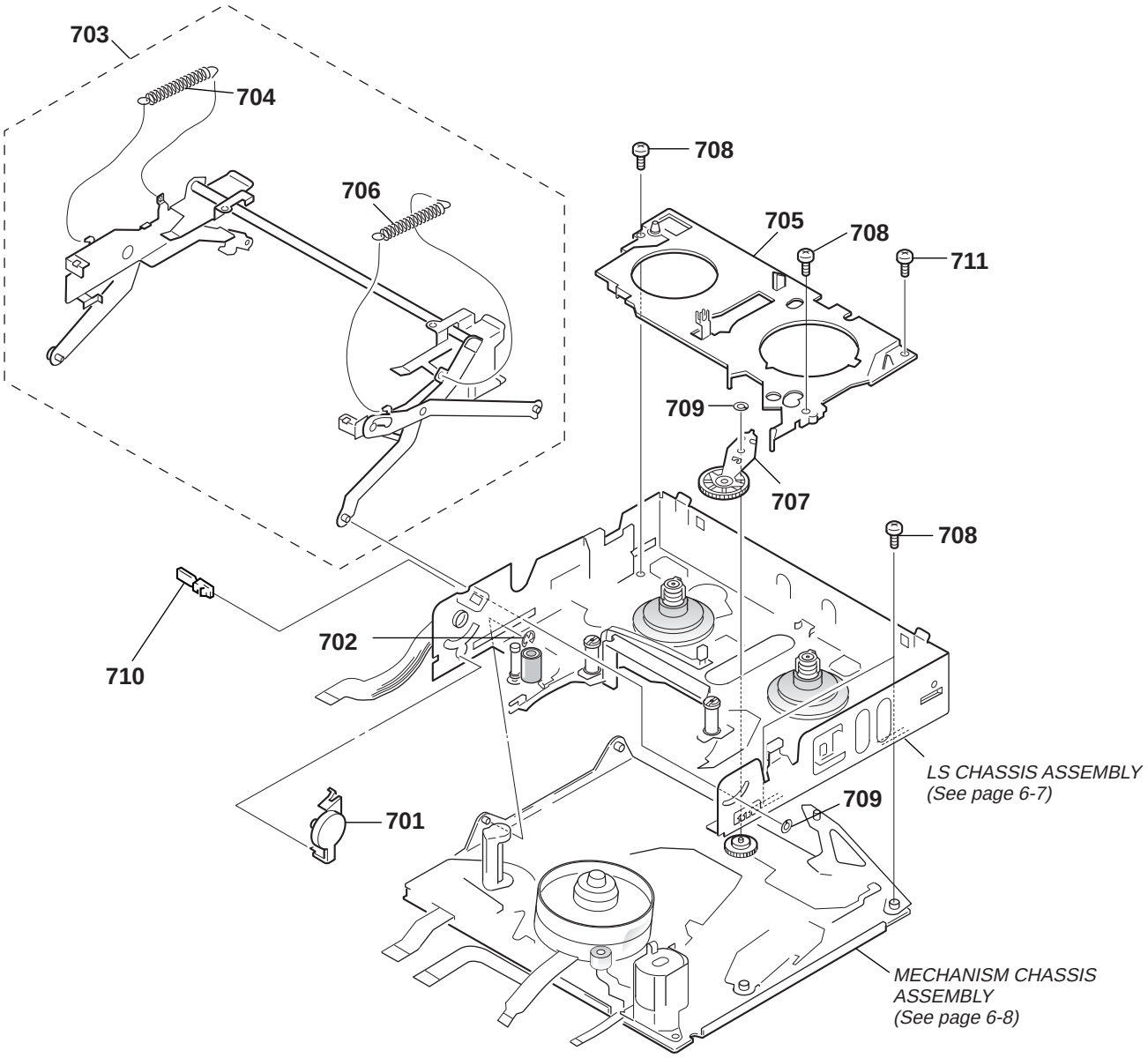

Ref. No.	Part No.	Description	Remarks
701	A-7040-421-A	DAMPER ASSY	
702	7-624-102-04	STOP RING 1.5, TYPE -E	
703	X-3949-153-2	CASSETTE COMPARTMENT ASSY	
704	3-965-587-03	SPRING(POWER TENSION),TENSION	
705	3-989-479-01	RETAINER (2), GOOSENECK	
706	3-973-268-01	SPRING(POWER TENSION),TENSION	

Ref. No.	Part No.	Description	Remarks
707	X-3949-383-1	GEAR ASSY (E), GOOSENECK	
708	3-947-503-01	SCREW (M1.4X2.5)	
709	3-727-176-01	WASHER, STOPPER	
710	3-971-076-01	FASTENER, D	
711	3-976-055-01	SCREW (M1.4X1)	

6-1-7. LS CHASSIS ASSEMBLY

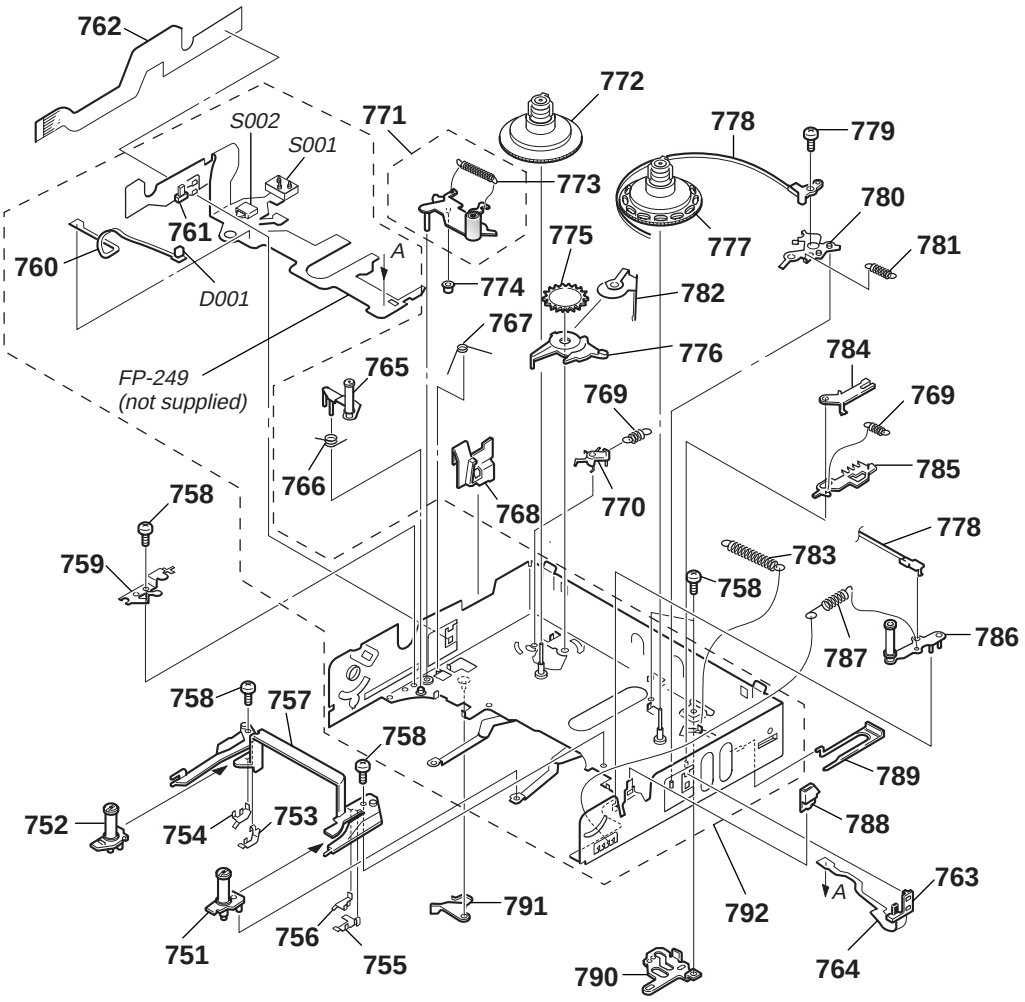

Ref. No.	Part No.	Description	Remarks
751	A-7040-419-A	BASE (S) BLOCK ASSY, GUIDE	
752	A-7040-418-B	BASE (T) BLOCK ASSY, GUIDE	
753	3-965-559-01	STOPPER (T)	
754	3-965-557-01	STOPPER (T), GB	
755	3-965-558-01	STOPPER (S)	
756	3-965-556-01	STOPPER (S), GB	
757	3-965-553-01	RAIL, GUIDE	
758	3-947-503-01	SCREW (M1.4X2.5)	
759	3-965-573-01	RETAINER, TG4	
760	1-658-213-11	FP-355 FLEXIBLE BOARD	
761	3-965-552-01	HOLDER (T), SENSOR	
762	1-657-786-13	FP-221 FLEXIBLE BOARD	
763	3-965-551-01	HOLDER (S), SENSOR	
764	1-658-214-11	FP-356 FLEXIBLE BOARD	
765	A-7040-417-A	ARM BLOCK ASSY, TG4	
766	3-965-574-01	SPRING (RETURN, TG4), TORSION	
767	3-965-575-01	SPRING (PINCH), TORSION	
768	3-965-568-11	GUIDE, LOCK	
769	3-965-562-01	SPRING (RATCHET), TENSION	
770	3-965-581-03	RATCHET, T	
771	X-3949-380-1	ARM ASSY (E), PINCH	
772	X-3945-398-2	DECK ASSY, REEL, T	
773	3-965-648-01	SPRING (PINCH), TENSION	

Ref. No.	Part No.	Description	Remarks
774	3-965-579-01	ROLLER, PINCH PRESS	
775	3-965-563-01	GEAR, T SOFT	
776	3-965-565-01	CLAW, T SOFT	
777	X-3945-397-1	DECK ASSY, REEL, S	
778	X-3945-396-1	BAND ASSY, TENSION REGULATOR	
779	3-945-756-01	SCREW (M1.4X3)	
780	3-965-583-01	ARM, RVS	
781	3-965-580-01	SPRING (ARM, RVS), TENSION	
782	3-966-384-01	SPRING, T SOFT	
783	3-965-578-01	SPRING, TENSION COIL	
784	3-965-560-01	RATCHET, S	
785	3-965-561-01	PLATE, RELEASE, S RATCHET	
786	X-3945-395-1	ARM ASSY, TG1	
787	3-965-576-01	SPRING (TG1), TENSION	
788	3-965-567-01	LID OPEN	
789	3-965-566-01	COVER, LS GUIDE	
* 790	3-965-577-01	PLATE, CAM, LS	
791	3-965-569-01	ARM, EJ	
792	A-7040-427-A	CHASSIS (S1) ASSY, LS	
D001	8-719-988-42	DIODE GL453	
S001	1-692-614-11	SWITCH, PUSH (3KEY) (Hi8 MP,ME/MP,REC PROOF)	
S002	1-572-688-11	SWITCH, PUSH (1 KEY) (C.C.LOCK)	

6-1-8. MECHANISM CHASSIS ASSEMBLY

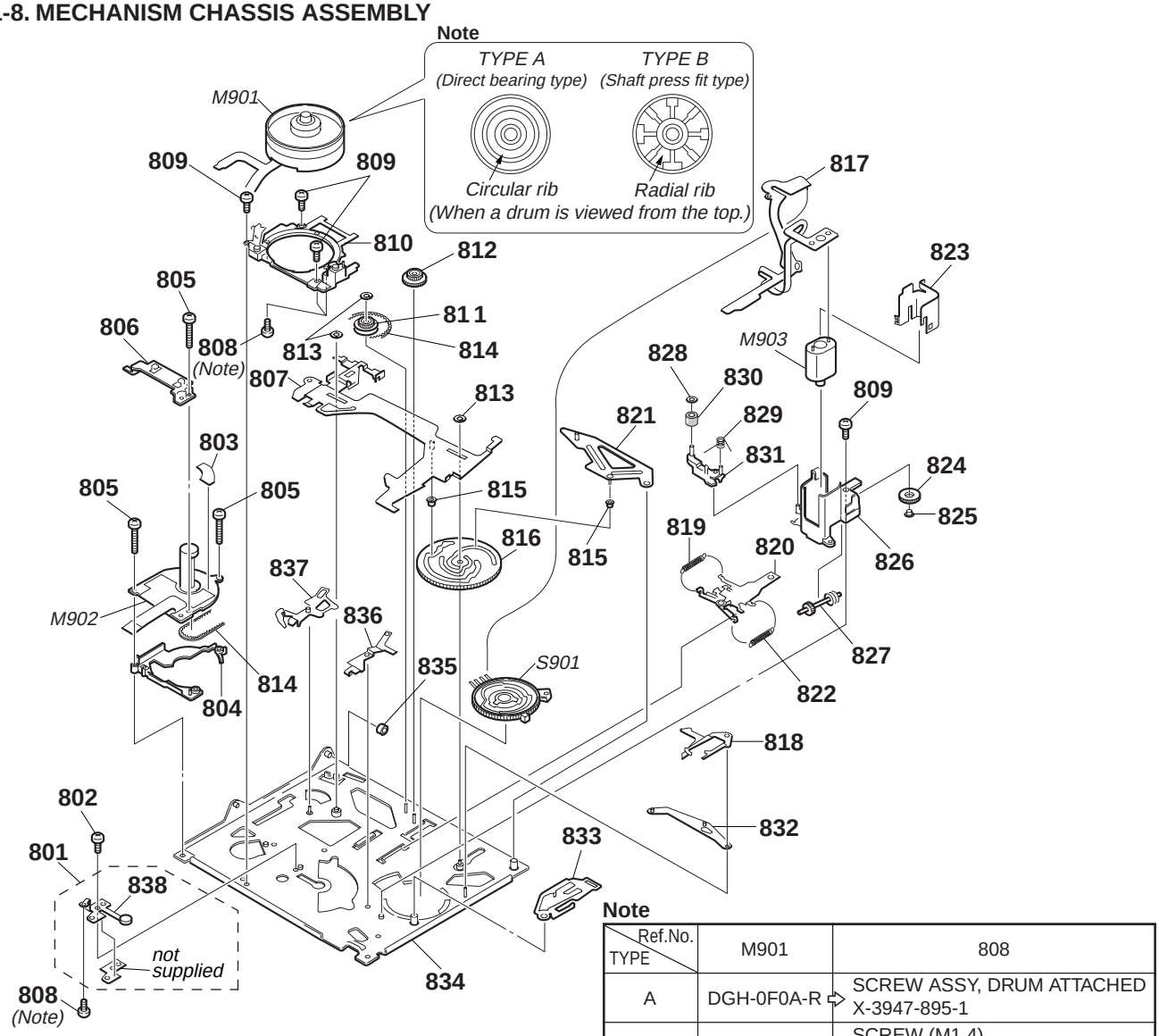

Note

TYPE \ Ref.No.	M901	808
A	DGH-0F0A-R ⇨	SCREW ASSY, DRUM ATTACHED X-3947-895-1
B	DGH-0E7A-R ⇨	SCREW (M1.4) 3-971-939-01

Be sure to refer to “How to identify drum and note” on page 2-8.

Ref. No.	Part No.	Description	Remarks
801	X-3947-343-1	GROUND (IM) ASSY, SHAFT	
802	3-965-550-02	SCREW (M1.7X1.6)	
803	1-672-542-11	FP-38 FLEXIBLE BOARD	
804	3-053-986-01	SPACER (E), CAPSTAN	
805	3-965-549-11	SCREW (M1.4X 5.8)	
806	3-053-988-01	HOLDER (E), FLEXIBLE	
807	3-971-644-01	SLIDER (2), M	
808	X-3947-895-1	SCREW ASSY, DRUM ATTACHED	(for DRUM TYPE A)
808	3-971-939-01	SCREW (M1.4) (for DRUM TYPE B)	
809	3-947-503-01	SCREW (M1.4X2.5)	
810	A-7040-494-A	BASE BLOCK ASSY, DRUM	
811	3-965-527-01	GEAR, CHANGE	
812	3-965-544-01	GEAR, RELAY	
813	3-331-007-21	WASHER	
814	3-965-546-01	BELT, TIMING	
815	3-965-533-01	ROLLER, LS	
816	3-965-528-01	GEAR, CAM	
817	1-657-784-11	FP-220 FLEXIBLE BOARD	
818	3-965-529-01	PLATE, REGULATOR, TENSION	
819	3-965-536-01	SPRING (LIMITTER ARM T), COIL	
820	X-3945-388-1	SLIDER ASSY, GL	

Ref. No.	Part No.	Description	Remarks
821	3-965-532-21	ARM, LS	
822	3-965-535-01	SPRING (LIMITTER ARM S), COIL	
823	3-965-542-01	SHIELD, MOTOR	
824	3-965-539-01	GEAR (A)	
825	3-965-538-01	SLEEVE, MOTOR HOLDER	
826	3-965-540-01	HOLDER, MOTOR	
827	3-965-541-01	SHAFT, WORM	
828	3-321-393-01	WASHER, STOPPER	
829	3-965-724-01	SPRING (RETURN, HC), TORSION	
830	A-7040-423-A	ROLLER BLOCK ASSY, HC	
831	X-3945-407-1	ARM ASSY, HC ROLLER	
832	3-965-531-01	ARM, GL	
833	3-965-530-01	PLATE (2), REGULATOR, TENSION	
834	X-3949-382-1	CHASSIS ASSY (E), MECHANICAL	
835	3-965-526-02	ROLLER, LS GUIDE	
836	3-965-547-01	ARM, HC DRIVING	
837	3-965-534-01	PLATE, PRESS, PINCH	
838	3-974-320-02	GROUND (IM), SHAFT	
M901	A-7048-897-A	DRUM BLOCK ASSY (DGH-0F0A-R)(NTSC)	
M902	8-835-635-01	MOTOR, DC SCE12A/C-NP (CAPSTAN)	
M903	X-3945-401-1	MOTOR ASSY, DC (LOADING)	
S901	1-762-436-15	SWITCH, ROTARY (ENCODER)	

6-2. ELECTRICAL PARTS LIST

NOTE:

- Due to standardization, replacements in the parts list may be different from the parts specified in the diagrams or the components used on the set.
- -XX, -X mean standardized parts, so they may have some difference from the original one.
- Items marked "*" are not stocked since they are seldom required for routine service. Some delay should be anticipated when ordering these items.
- CAPACITORS:
  uF: µF
- RESISTORS
  All resistors are in ohms.
  METAL: metal-film resistor
  METAL OXIDE: Metal Oxide-film resistor
  F: nonflammable
- COILS
  uH: µH
- SEMICONDUCTORS
  In each case, u: µ, for example:
  uA...: µA... , uPA... , µPA... ,
  uPB... , µPB... , uPC... , µPC... ,
  uPD..., µPD...

When indicating parts by reference number, please include the board name.

The components identified by mark ⚠ or dotted line with mark ⚠ are critical for safety. Replace only with part number specified.

Les composants identifiés par une marque ⚠ sont critiques pour la sécurité.
Ne les remplacer que par une pièce portant le numéro spécifié.

- Abbreviation
  CND : Canadian model
  HK : HongKong model
  BR : Brazilian model

Ref. No.	Part No.	Description			Remarks
	A-7073-834-A	CD-209 BOARD, COMPLETE			
		**********			
					(Ref.No.:10000 Series)
		(IC 1401 is not included in this complete board.)			
		< CAPACITOR >			
C1401	1-164-156-11	CERAMIC CHIP	0.1uF		25V
C1405	1-135-210-11	TANTALUM CHIP	4.7uF	20%	10V
C1406	1-135-214-21	TANTAL. CHIP	4.7uF	20%	20V
C1407	1-135-210-11	TANTALUM CHIP	4.7uF	20%	10V
C1409	1-162-970-11	CERAMIC CHIP	0.01uF	10%	25V
C1412	1-135-259-11	TANTAL. CHIP	10uF	20%	6.3V
		< CONNECTOR >			
CN1401	1-766-346-21	CONNECTOR, FFC/FPC 16P			
		< IC >			
IC1401	A-7030-865-A	CCD BLOCK ASSY (CCD IMAGER)			
IC1402	8-759-533-83	IC AD8011AR-REEL			
		< COIL >			
L1401	1-414-757-11	INDUCTOR 100uH			
L1402	1-414-754-11	INDUCTOR 10uH			
		< RESISTOR >			
R1405	1-216-864-11	METAL CHIP	0	5%	1/16W
R1406	1-216-829-11	METAL CHIP	4.7K	5%	1/16W
R1407	1-216-830-11	METAL CHIP	5.6K	5%	1/16W
R1408	1-216-821-11	METAL CHIP	1K	5%	1/16W
R1409	1-216-808-11	METAL CHIP	82	5%	1/16W
	A-7073-841-A	CF-56 BOARD, COMPLETE			
		**********			
					(Ref.No.:2000 Series)
		< BATTERY HOLDER >			
BH001	1-550-104-11	HOLDER, BATTERY			
		< CONNECTOR >			
CN001	1-778-637-21	CONNECTOR, FFC/FPC (ZIF) 50P			
* CN003	1-580-055-21	PIN, CONNECTOR 2P			
CN006	1-778-508-21	PIN, CONNECTOR (PC BOARD) 6P			
* CN008	1-778-283-11	CONNECTOR, FFC/FPC 4P			
CN009	1-778-509-21	PIN, CONNECTOR (PC BOARD) 11P			
CN010	1-774-633-11	CONNECTOR, FFC/FPC 8P			

Be sure to read "Precautions upon replacing CCD imager" on page 4-9 when changing the CCD imager.

Ref. No.	Part No.	Description			Remarks
		< DIODE >			
D001	8-719-062-16	DIODE 01ZA8.2(TPL3)			
D005	8-719-073-03	DIODE MA8082-(K8).S0			
D006	8-719-073-03	DIODE MA8082-(K8).S0			
D008	8-719-073-01	DIODE MA111-(K8).S0			
D013	8-719-073-03	DIODE MA8082-(K8).S0			
		< TRANSISTOR >			
Q001	8-729-042-29	TRANSISTOR RN1104F(TPL3)			
Q003	8-729-037-52	TRANSISTOR 2SC4738F-Y/GR(TPL3)			
Q005	8-729-230-72	TRANSISTOR 2SA1362-YG-EL			
		< RESISTOR >			
R003	1-216-833-11	METAL CHIP	10K	5%	1/16W
R005	1-216-833-11	METAL CHIP	10K	5%	1/16W
R006	1-216-833-11	METAL CHIP	10K	5%	1/16W
R007	1-216-833-11	METAL CHIP	10K	5%	1/16W
R008	1-216-833-11	METAL CHIP	10K	5%	1/16W
R009	1-216-833-11	METAL CHIP	10K	5%	1/16W
R013	1-216-822-11	METAL CHIP	1.2K	5%	1/16W
R015	1-216-826-11	METAL CHIP	2.7K	5%	1/16W
R016	1-216-822-11	METAL CHIP	1.2K	5%	1/16W
R020	1-216-823-11	METAL CHIP	1.5K	5%	1/16W
R022	1-216-823-11	METAL CHIP	1.5K	5%	1/16W
R023	1-216-825-11	METAL CHIP	2.2K	5%	1/16W
R025	1-216-825-11	METAL CHIP	2.2K	5%	1/16W
R026	1-216-825-11	METAL CHIP	2.2K	5%	1/16W
R029	1-216-828-11	METAL CHIP	3.9K	5%	1/16W
R031	1-216-828-11	METAL CHIP	3.9K	5%	1/16W
R032	1-216-828-11	METAL CHIP	3.9K	5%	1/16W
R036	1-216-832-11	METAL CHIP	8.2K	5%	1/16W
R037	1-216-832-11	METAL CHIP	8.2K	5%	1/16W
R038	1-216-832-11	METAL CHIP	8.2K	5%	1/16W
R039	1-216-838-11	METAL CHIP	27K	5%	1/16W
R040	1-216-838-11	METAL CHIP	27K	5%	1/16W
R041	1-216-838-11	METAL CHIP	27K	5%	1/16W
R049	1-216-849-11	METAL CHIP	220K	5%	1/16W
R050	1-216-853-11	METAL CHIP	470K	5%	1/16W
R051	1-216-837-11	METAL CHIP	22K	5%	1/16W
R052	1-216-829-11	METAL CHIP	4.7K	5%	1/16W
		< SWITCH >			
S001	1-771-138-61	SWITCH, KEY BOARD (DIGITAL EFFECT)			
S003	1-771-138-61	SWITCH, KEY BOARD (DATE)			
S004	1-771-029-21	SWITCH, TACTILE (PROGRAM AE)			
S006	1-771-138-61	SWITCH, KEY BOARD (PICTURE EFFECT)			
S008	1-771-138-61	SWITCH, KEY BOARD (COUNTER RESET)			

Ref. No.	Part No.	Description	Remarks
S010	1-771-138-61	SWITCH, KEY BOARD (MENU)	
S012	1-771-029-21	SWITCH, TACTILE (EXPOSURE)	
S013	1-771-138-61	SWITCH, KEY BOARD (END SEARCH)	
S015	1-771-025-41	SWITCH, ROTARY (ENCODER)(CONTROL DIAL)	
S017	1-771-029-21	SWITCH, TACTILE (BACK LIGHT)	
S018	1-771-138-61	SWITCH, KEY BOARD (TITLE)	
S021	1-771-138-61	SWITCH, KEY BOARD (TIME)	
S022	1-771-138-61	SWITCH, KEY BOARD (DISPLAY)	
S024	1-762-648-21	SWITCH, SLIDE (START/STOP MODE)	
S027	1-771-029-31	SWITCH, TACTILE (FADER)	

A-7073-835-A DD-117 (VIB) BOARD, COMPLETE
****
(Ref.No.:2000 Series)

< CAPACITOR >

C801	1-162-967-11	CERAMIC CHIP	0.0033uF	10%	50V
C802	1-162-960-11	CERAMIC CHIP	220PF	10%	50V
C803	1-107-826-91	CERAMIC CHIP	0.1uF	10%	16V
C804	1-107-826-91	CERAMIC CHIP	0.1uF	10%	16V
C805	1-107-826-91	CERAMIC CHIP	0.1uF	10%	16V
C806	1-107-826-91	CERAMIC CHIP	0.1uF	10%	16V
C807	1-162-970-11	CERAMIC CHIP	0.01uF	10%	25V
C808	1-164-227-11	CERAMIC CHIP	0.022uF	10%	25V
C809	1-162-967-11	CERAMIC CHIP	0.0033uF	10%	50V
C810	1-164-227-11	CERAMIC CHIP	0.022uF	10%	25V
C811	1-162-965-11	CERAMIC CHIP	0.0015uF	10%	50V
C812	1-162-964-11	CERAMIC CHIP	0.001uF	10%	50V
C813	1-162-964-11	CERAMIC CHIP	0.001uF	10%	50V
C815	1-162-964-11	CERAMIC CHIP	0.001uF	10%	50V
C817	1-113-991-11	TANTAL. CHIP	33uF	20%	16V
C818	1-163-038-91	CERAMIC CHIP	0.1uF		25V
C819	1-162-964-11	CERAMIC CHIP	0.001uF	10%	50V
C820	1-162-964-11	CERAMIC CHIP	0.001uF	10%	50V
C821	1-162-964-11	CERAMIC CHIP	0.001uF	10%	50V
C823	1-115-566-11	CERAMIC CHIP	4.7uF	10%	10V
C824	1-115-566-11	CERAMIC CHIP	4.7uF	10%	10V
C825	1-115-566-11	CERAMIC CHIP	4.7uF	10%	10V
C826	1-115-566-11	CERAMIC CHIP	4.7uF	10%	10V
C827	1-164-227-11	CERAMIC CHIP	0.022uF	10%	25V
C828	1-162-962-11	CERAMIC CHIP	470PF	10%	50V
C829	1-162-966-11	CERAMIC CHIP	0.0022uF	10%	50V
C830	1-162-966-11	CERAMIC CHIP	0.0022uF	10%	50V
C831	1-164-489-11	CERAMIC CHIP	0.22uF	10%	16V
C832	1-115-566-11	CERAMIC CHIP	4.7uF	10%	10V
C834	1-115-566-11	CERAMIC CHIP	4.7uF	10%	10V
C836	1-115-566-11	CERAMIC CHIP	4.7uF	10%	10V
C837	1-115-566-11	CERAMIC CHIP	4.7uF	10%	10V
C838	1-115-566-11	CERAMIC CHIP	4.7uF	10%	10V
C840	1-115-566-11	CERAMIC CHIP	4.7uF	10%	10V
C841	1-135-149-21	TANTALUM CHIP	2.2uF	20%	10V
C842	1-135-216-11	TANTALUM CHIP	10uF	20%	10V
C843	1-135-157-21	TANTALUM CHIP	10uF	20%	6.3V
C844	1-135-157-21	TANTALUM CHIP	10uF	20%	6.3V
C846	1-135-149-21	TANTALUM CHIP	2.2uF	20%	10V
C847	1-164-506-11	CERAMIC CHIP	4.7uF		16V
C848	1-164-506-11	CERAMIC CHIP	4.7uF		16V
C849	1-135-149-21	TANTALUM CHIP	2.2uF	20%	10V
C850	1-135-149-21	TANTALUM CHIP	2.2uF	20%	10V
C851	1-135-157-21	TANTALUM CHIP	10uF	20%	6.3V
C852	1-164-505-11	CERAMIC CHIP	2.2uF		16V
C853	1-165-319-11	CERAMIC CHIP	0.1uF		50V
C855	1-135-149-21	TANTALUM CHIP	2.2uF	20%	10V
C857	1-135-157-21	TANTALUM CHIP	10uF	20%	6.3V
C860	1-107-826-91	CERAMIC CHIP	0.1uF	10%	16V
C861	1-162-968-11	CERAMIC CHIP	0.0047uF	10%	50V
C862	1-164-677-11	CERAMIC CHIP	0.033uF	10%	16V
C863	1-164-227-11	CERAMIC CHIP	0.022uF	10%	25V
C864	1-113-985-11	TANTAL. CHIP	10uF	20%	20V
C865	1-164-505-11	CERAMIC CHIP	2.2uF		16V
C866	1-164-505-11	CERAMIC CHIP	2.2uF		16V
C868	1-135-214-21	TANTAL. CHIP	4.7uF	20%	20V
C869	1-164-505-11	CERAMIC CHIP	2.2uF		16V
C871	1-135-157-21	TANTALUM CHIP	10uF	20%	6.3V
C872	1-164-227-11	CERAMIC CHIP	0.022uF	10%	25V
C873	1-164-227-11	CERAMIC CHIP	0.022uF	10%	25V
C875	1-164-489-11	CERAMIC CHIP	0.22uF	10%	16V
C876	1-107-826-91	CERAMIC CHIP	0.1uF	10%	16V
C877	1-107-826-91	CERAMIC CHIP	0.1uF	10%	16V

< CONNECTOR >

*	CN801	1-580-756-21	PIN, CONNECTOR 7P
	CN931	1-774-597-41	CONNECTOR, BOARD TO BOARD 70P
	CN933	1-785-627-21	PIN, CONNECTOR (PC BOARD) 10P
	CN934	1-766-342-21	CONNECTOR, FFC/FPC 12P
	CN935	1-764-709-11	CONNECTOR, FFC/FPC (LIF) 10P
	CN936	1-774-631-21	CONNECTOR, FFC/FPC 6P

< DIODE >

D806	8-719-027-76	DIODE 1SS357-TPH3
D809	8-719-027-77	DIODE MA796-TX
D810	8-719-027-76	DIODE 1SS357-TPH3
D812	8-719-027-76	DIODE 1SS357-TPH3
D813	8-719-073-03	DIODE MA8082-(K8).S0
D814	8-719-073-03	DIODE MA8082-(K8).S0
D815	8-719-073-03	DIODE MA8082-(K8).S0
D816	8-719-027-76	DIODE 1SS357-TPH3
D817	8-719-073-02	DIODE MA728-(K8).S0
D818	8-719-027-76	DIODE 1SS357-TPH3
D822	8-719-056-89	DIODE MA8120-TX
D933	8-719-062-16	DIODE 01ZA8.2(TPL3)
D934	8-719-062-16	DIODE 01ZA8.2(TPL3)
D936	8-719-062-16	DIODE 01ZA8.2(TPL3)

< FERRITE BEAD >

FB931	1-414-760-21	FERRITE 0UH
FB932	1-414-760-21	FERRITE 0UH
FB933	1-414-760-21	FERRITE 0UH

< IC >

IC801	8-759-384-78	IC SN104241PM-TEB
IC802	8-759-492-30	IC MB3817PFV-G-BND

Ref. No.	Part No.	Description	Remarks
		< COIL >	
L804	1-412-056-11	INDUCTOR CHIP 4.7uH	
L805	1-409-532-41	INDUCTOR 33uH	
L806	1-409-532-41	INDUCTOR 33uH	
L807	1-424-674-11	INDUCTOR 22uH	
L808	1-424-674-11	INDUCTOR 22uH	
L809	1-424-674-11	INDUCTOR 22uH	
L810	1-414-396-21	INDUCTOR 4.7uH	
L811	1-414-396-21	INDUCTOR 4.7uH	
L812	1-414-396-21	INDUCTOR 4.7uH	
L813	1-414-396-21	INDUCTOR 4.7uH	
L814	1-414-396-21	INDUCTOR 4.7uH	
L815	1-414-396-21	INDUCTOR 4.7uH	
L817	1-414-396-21	INDUCTOR 4.7uH	
L818	1-414-396-21	INDUCTOR 4.7uH	
L819	1-414-400-11	INDUCTOR 22uH	
L820	1-424-674-11	INDUCTOR 22uH	
L821	1-412-056-11	INDUCTOR CHIP 4.7uH	
		< IC LINK >	
⚠PS801	1-576-286-21	FUSE, MICRO (1.4A/24V)	
⚠PS803	1-576-286-21	FUSE, MICRO (1.4A/24V)	
⚠PS804	1-576-286-21	FUSE, MICRO (1.4A/24V)	
⚠PS805	1-576-286-21	FUSE, MICRO (1.4A/24V)	
⚠PS806	1-576-286-21	FUSE, MICRO (1.4A/24V)	
		< TRANSISTOR >	
Q801	8-729-024-48	TRANSISTOR 2SK1830-TE85L	
Q803	8-729-804-41	TRANSISTOR 2SB1122-ST-TD	
Q804	8-729-042-29	TRANSISTOR RN1104F(TPL3)	
Q805	8-729-024-48	TRANSISTOR 2SK1830-TE85L	
Q806	8-729-042-29	TRANSISTOR RN1104F(TPL3)	
Q807	8-729-804-41	TRANSISTOR 2SB1122-ST-TD	
Q808	8-729-046-98	TRANSISTOR CPH6702-TL	
Q809	8-729-046-98	TRANSISTOR CPH6702-TL	
Q810	8-729-046-98	TRANSISTOR CPH6702-TL	
Q812	8-729-044-58	TRANSISTOR SI2304DS-T1	
Q813	8-729-037-53	TRANSISTOR 2SA1832F-Y/GR(TPL3)	
Q814	8-729-046-98	TRANSISTOR CPH6702-TL	
Q815	8-729-046-98	TRANSISTOR CPH6702-TL	
Q817	8-729-044-58	TRANSISTOR SI2304DS-T1	
Q819	8-729-046-98	TRANSISTOR CPH6702-TL	
Q823	8-729-042-29	TRANSISTOR RN1104F(TPL3)	
Q826	8-729-042-29	TRANSISTOR RN1104F(TPL3)	
Q827	8-729-037-61	TRANSISTOR RN2104F(TPL3)	
Q828	8-729-042-29	TRANSISTOR RN1104F(TPL3)	
Q829	8-729-037-53	TRANSISTOR 2SA1832F-Y/GR(TPL3)	
Q830	8-729-037-52	TRANSISTOR 2SC4738F-Y/GR(TPL3)	
Q831	8-729-046-75	TRANSISTOR SI2301DS-T1	
Q832	8-729-046-75	TRANSISTOR SI2301DS-T1	
Q833	8-729-046-75	TRANSISTOR SI2301DS-T1	
Q834	8-729-037-53	TRANSISTOR 2SA1832F-Y/GR(TPL3)	
Q835	8-729-037-52	TRANSISTOR 2SC4738F-Y/GR(TPL3)	
Q836	8-729-037-53	TRANSISTOR 2SA1832F-Y/GR(TPL3)	
Q838	8-729-037-53	TRANSISTOR 2SA1832F-Y/GR(TPL3)	
Q839	8-729-037-52	TRANSISTOR 2SC4738F-Y/GR(TPL3)	
Q840	8-729-037-53	TRANSISTOR 2SA1832F-Y/GR(TPL3)	
Q842	8-729-037-52	TRANSISTOR 2SC4738F-Y/GR(TPL3)	
Q843	8-729-037-53	TRANSISTOR 2SA1832F-Y/GR(TPL3)	
Q844	8-729-037-53	TRANSISTOR 2SA1832F-Y/GR(TPL3)	
Q845	8-729-037-52	TRANSISTOR 2SC4738F-Y/GR(TPL3)	
Q847	8-729-037-52	TRANSISTOR 2SC4738F-Y/GR(TPL3)	
Q848	8-729-037-52	TRANSISTOR 2SC4738F-Y/GR(TPL3)	
Q849	8-729-037-53	TRANSISTOR 2SA1832F-Y/GR(TPL3)	
Q850	8-729-037-52	TRANSISTOR 2SC4738F-Y/GR(TPL3)	
⚠Q851	8-729-046-77	TRANSISTOR SI4963DY-T1	
Q852	8-729-017-61	TRANSISTOR 2SB1581-T1	
Q853	8-729-037-53	TRANSISTOR 2SA1832F-Y/GR(TPL3)	
Q854	8-729-037-52	TRANSISTOR 2SC4738F-Y/GR(TPL3)	
Q855	8-729-037-52	TRANSISTOR 2SC4738F-Y/GR(TPL3)	
Q856	8-729-037-52	TRANSISTOR 2SC4738F-Y/GR(TPL3)	
Q932	8-729-042-29	TRANSISTOR RN1104F(TPL3)	
Q933	8-729-042-29	TRANSISTOR RN1104F(TPL3)	
Q934	8-729-037-53	TRANSISTOR 2SA1832F-Y/GR(TPL3)	
		< RESISTOR >	
R801	1-216-841-11	METAL CHIP 47K 5% 1/16W	
R802	1-218-893-11	RES,CHIP 82K 0.50% 1/16W	
R803	1-216-833-11	METAL CHIP 10K 5% 1/16W	
R804	1-216-837-11	METAL CHIP 22K 5% 1/16W	
R805	1-216-835-11	METAL CHIP 15K 5% 1/16W	
R806	1-218-879-11	RES,CHIP 22K 0.50% 1/16W	
R807	1-216-839-11	METAL CHIP 33K 5% 1/16W	
R808	1-218-879-11	RES,CHIP 22K 0.50% 1/16W	
R809	1-216-813-11	METAL CHIP 220 5% 1/16W	
R810	1-216-837-11	METAL CHIP 22K 5% 1/16W	
R811	1-218-883-11	RES,CHIP 33K 0.50% 1/16W	
R812	1-218-901-11	RES,CHIP 180K 0.50% 1/16W	
R813	1-216-853-11	METAL CHIP 470K 5% 1/16W	
R814	1-218-879-11	RES,CHIP 22K 0.50% 1/16W	
R815	1-216-813-11	METAL CHIP 220 5% 1/16W	
R816	1-218-879-11	RES,CHIP 22K 0.50% 1/16W	
R817	1-218-879-11	RES,CHIP 22K 0.50% 1/16W	
R818	1-216-813-11	METAL CHIP 220 5% 1/16W	
R819	1-218-887-11	RES,CHIP 47K 0.50% 1/16W	
R820	1-216-845-11	METAL CHIP 100K 5% 1/16W	
R821	1-218-879-11	RES,CHIP 22K 0.50% 1/16W	
R822	1-216-150-91	RES,CHIP 10 5% 1/8W	
R824	1-216-837-11	METAL CHIP 22K 5% 1/16W	
R825	1-218-879-11	RES,CHIP 22K 0.50% 1/16W	
R826	1-216-821-11	METAL CHIP 1K 5% 1/16W	
R827	1-216-821-11	METAL CHIP 1K 5% 1/16W	
R828	1-216-831-11	METAL CHIP 6.8K 5% 1/16W	
R829	1-216-837-11	METAL CHIP 22K 5% 1/16W	
R830	1-218-883-11	RES,CHIP 33K 0.50% 1/16W	
R831	1-216-841-11	METAL CHIP 47K 5% 1/16W	
R832	1-218-879-11	RES,CHIP 22K 0.50% 1/16W	
R833	1-216-839-11	METAL CHIP 33K 5% 1/16W	
R834	1-218-881-11	RES,CHIP 27K 0.50% 1/16W	
R835	1-218-879-11	RES,CHIP 22K 0.50% 1/16W	
R836	1-216-837-11	METAL CHIP 22K 5% 1/16W	

Note :
The components identified by mark ⚠ or dotted line with mark ⚠ are critical for safety.
Replace only with part number specified.

Note :
Les composants identifiés par une marque ⚠ sont critiques pour la sécurité.
Ne les remplacer que par une pièce portant le numéro spécifié.

Ref. No.	Part No.	Description				Remarks
R837	1-216-826-11	METAL CHIP		2.7K	5%	1/16W
R838	1-216-837-11	METAL CHIP		22K	5%	1/16W
R839	1-216-837-11	METAL CHIP		22K	5%	1/16W
R840	1-216-839-11	METAL CHIP		33K	5%	1/16W
R841	1-216-834-11	METAL CHIP		12K	5%	1/16W
R842	1-218-903-11	RES,CHIP		220K	0.50%	1/16W
R843	1-218-895-11	RES,CHIP		100K	0.50%	1/16W
R844	1-216-296-91	SHORT	0			
R845	1-218-847-11	RES,CHIP		1K	0.50%	1/16W
R846	1-216-296-91	SHORT	0			
R847	1-216-296-91	SHORT	0			
R849	1-216-837-11	METAL CHIP		22K	5%	1/16W
R850	1-216-857-11	METAL CHIP		1M	5%	1/16W
R852	1-218-851-11	RES,CHIP		1.5K	0.50%	1/16W
R853	1-216-849-11	METAL CHIP		220K	5%	1/16W
R854	1-218-887-11	RES,CHIP		47K	0.50%	1/16W
R865	1-216-841-11	METAL CHIP		47K	5%	1/16W
R866	1-216-837-11	METAL CHIP		22K	5%	1/16W
R867	1-216-296-91	SHORT	0			
R868	1-216-849-11	METAL CHIP		220K	5%	1/16W
R870	1-216-857-11	METAL CHIP		1M	5%	1/16W
R871	1-216-857-11	METAL CHIP		1M	5%	1/16W
R872	1-216-845-11	METAL CHIP		100K	5%	1/16W
R873	1-216-841-11	METAL CHIP		47K	5%	1/16W
R874	1-216-849-11	METAL CHIP		220K	5%	1/16W
R875	1-216-845-11	METAL CHIP		100K	5%	1/16W
R876	1-216-849-11	METAL CHIP		220K	5%	1/16W
R878	1-216-857-11	METAL CHIP		1M	5%	1/16W
R879	1-216-837-11	METAL CHIP		22K	5%	1/16W
R880	1-218-895-11	RES,CHIP		100K	0.50%	1/16W
R881	1-216-864-11	METAL CHIP		0	5%	1/16W
R882	1-218-903-11	RES,CHIP		220K	0.50%	1/16W
R883	1-216-841-11	METAL CHIP		47K	5%	1/16W
R884	1-216-845-11	METAL CHIP		100K	5%	1/16W
R887	1-216-849-11	METAL CHIP		220K	5%	1/16W
R888	1-216-845-11	METAL CHIP		100K	5%	1/16W
R890	1-216-845-11	METAL CHIP		100K	5%	1/16W
R891	1-218-895-11	RES,CHIP		100K	0.50%	1/16W
R892	1-218-903-11	RES,CHIP		220K	0.50%	1/16W
R893	1-216-835-11	METAL CHIP		15K	5%	1/16W
R895	1-216-837-11	METAL CHIP		22K	5%	1/16W
R896	1-218-903-11	RES,CHIP		220K	0.50%	1/16W
R897	1-218-891-11	RES,CHIP		68K	0.50%	1/16W
R900	1-218-895-11	RES,CHIP		100K	0.50%	1/16W
R901	1-218-887-11	RES,CHIP		47K	0.50%	1/16W
R902	1-216-864-11	METAL CHIP		0	5%	1/16W
R903	1-216-845-11	METAL CHIP		100K	5%	1/16W
R904	1-216-849-11	METAL CHIP		220K	5%	1/16W
R905	1-218-901-11	RES,CHIP		180K	0.50%	1/16W
R906	1-216-833-11	METAL CHIP		10K	5%	1/16W
R907	1-218-903-11	RES,CHIP		220K	0.50%	1/16W
R908	1-216-841-11	METAL CHIP		47K	5%	1/16W
R910	1-216-833-11	METAL CHIP		10K	5%	1/16W
R911	1-218-883-11	RES,CHIP		33K	0.50%	1/16W
R912	1-218-879-11	RES,CHIP		22K	0.50%	1/16W

Ref. No.	Part No.	Description				Remarks
R913	1-216-857-11	METAL CHIP		1M	5%	1/16W
R914	1-216-811-11	METAL CHIP		150	5%	1/16W
R915	1-218-911-11	RES,CHIP		470K	0.50%	1/16W
R917	1-216-864-11	METAL CHIP		0	5%	1/16W
R918	1-216-849-11	METAL CHIP		220K	5%	1/16W
R921	1-216-296-91	SHORT	0			
R922	1-216-296-91	SHORT	0			
R923	1-216-296-91	SHORT	0			
R924	1-216-849-11	METAL CHIP		220K	5%	1/16W
R925	1-216-864-11	METAL CHIP		0	5%	1/16W
R926	1-216-821-11	METAL CHIP		1K	5%	1/16W
R932	1-216-841-11	METAL CHIP		47K	5%	1/16W
R933	1-216-821-11	METAL CHIP		1K	5%	1/16W
R934	1-216-821-11	METAL CHIP		1K	5%	1/16W
R935	1-216-821-11	METAL CHIP		1K	5%	1/16W
R936	1-216-821-11	METAL CHIP		1K	5%	1/16W
R937	1-216-821-11	METAL CHIP		1K	5%	1/16W
R938	1-216-821-11	METAL CHIP		1K	5%	1/16W
R939	1-216-821-11	METAL CHIP		1K	5%	1/16W
R940	1-216-819-11	METAL CHIP		680	5%	1/16W
R941	1-216-821-11	METAL CHIP		1K	5%	1/16W
R942	1-216-821-11	METAL CHIP		1K	5%	1/16W
R943	1-216-029-00	METAL CHIP		150	5%	1/10W
R944	1-216-864-11	METAL CHIP		0	5%	1/16W
		< TRANSFORMER >				
⚠T801	1-431-749-11	TRANSFORMER, DC/DC CONVERTER				
		FP-249 BOARD, COMPLETE(Not Supplied)				
		**********				
		(Ref.No.:5000 Series)				
	1-658-214-11	FP-356 FLEXIBLE BOARD				
	3-965-551-01	HOLDER (S), SENSOR				
	3-965-552-01	HOLDER (T), SENSOR				
		< HOLE ELEMENT >				
H001	8-719-033-37	ELEMENT, HALL HW-105C				
H002	8-719-033-37	ELEMENT, HALL HW-105C				
		< TRANSISTOR >				
Q001	8-729-907-25	PHOTO TRANSISTOR PT4850F				
Q002	8-729-907-25	PHOTO TRANSISTOR PT4850F				
		< SWITCH >				
S001	1-692-614-11	SWITCH, PUSH(3 KEY)				
		(Hi8 MP,ME/MP,REC PROOF)				
S002	1-572-688-11	SWITCH, PUSH (1 KEY) (C.C LOCK)				
	1-658-213-11	FP-355 FLEXIBLE BOARD				
		**********				
		(Ref.No.:5000 Series)				
		< DIODE >				
D001	8-719-988-42	DIODE GL453				

Note :
The components identified by mark ⚠ or dotted line with mark ⚠ are critical for safety.
Replace only with part number specified.

Note :
Les composants identifiés par une marque ⚠ sont critiques pour la sécurité.
Ne les remplacer que par une pièce portant le numéro spécifié.

Ref. No.	Part No.	Description			Remarks
	A-7073-840-A	MA-351 (IB) BOARD, COMPLETE			
		**********			
					(Ref.No.:2000 Series)
		< CAPACITOR >			
C301	1-107-686-11	TANTAL. CHIP	4.7uF	20%	16V
C302	1-107-826-91	CERAMIC CHIP	0.1uF	10%	16V
C303	1-107-826-91	CERAMIC CHIP	0.1uF	10%	16V
C304	1-107-826-91	CERAMIC CHIP	0.1uF	10%	16V
C305	1-107-826-91	CERAMIC CHIP	0.1uF	10%	16V
C337	1-135-259-11	TANTAL. CHIP	10uF	20%	6.3V
C338	1-162-964-11	CERAMIC CHIP	0.001uF	10%	50V
C339	1-164-227-11	CERAMIC CHIP	0.022uF	10%	25V
C340	1-162-927-11	CERAMIC CHIP	100PF	5%	50V
C341	1-165-176-11	CERAMIC CHIP	0.047uF	10%	16V
C343	1-162-970-11	CERAMIC CHIP	0.01uF	10%	25V
C344	1-107-826-91	CERAMIC CHIP	0.1uF	10%	16V
C345	1-107-826-91	CERAMIC CHIP	0.1uF	10%	16V
C347	1-162-970-11	CERAMIC CHIP	0.01uF	10%	25V
C348	1-107-826-91	CERAMIC CHIP	0.1uF	10%	16V
C349	1-107-826-91	CERAMIC CHIP	0.1uF	10%	16V
C350	1-135-259-11	TANTAL. CHIP	10uF	20%	6.3V
C351	1-164-227-11	CERAMIC CHIP	0.022uF	10%	25V
C352	1-162-964-11	CERAMIC CHIP	0.001uF	10%	50V
C353	1-162-927-11	CERAMIC CHIP	100PF	5%	50V
C354	1-165-176-11	CERAMIC CHIP	0.047uF	10%	16V
C355	1-164-245-11	CERAMIC CHIP	0.015uF	10%	25V
C356	1-164-227-11	CERAMIC CHIP	0.022uF	10%	25V
C357	1-164-245-11	CERAMIC CHIP	0.015uF	10%	25V
C358	1-164-227-11	CERAMIC CHIP	0.022uF	10%	25V
C359	1-162-968-11	CERAMIC CHIP	0.0047uF	10%	50V
C360	1-165-176-11	CERAMIC CHIP	0.047uF	10%	16V
C361	1-165-176-11	CERAMIC CHIP	0.047uF	10%	16V
C362	1-164-227-11	CERAMIC CHIP	0.022uF	10%	25V
C363	1-162-968-11	CERAMIC CHIP	0.0047uF	10%	50V
C364	1-164-245-11	CERAMIC CHIP	0.015uF	10%	25V
C365	1-165-176-11	CERAMIC CHIP	0.047uF	10%	16V
C366	1-165-176-11	CERAMIC CHIP	0.047uF	10%	16V
C367	1-164-227-11	CERAMIC CHIP	0.022uF	10%	25V
C368	1-164-245-11	CERAMIC CHIP	0.015uF	10%	25V
C369	1-162-962-11	CERAMIC CHIP	470PF	10%	50V
C370	1-162-962-11	CERAMIC CHIP	470PF	10%	50V
C371	1-164-346-11	CERAMIC CHIP	1uF		16V
C372	1-164-346-11	CERAMIC CHIP	1uF		16V
C373	1-164-156-11	CERAMIC CHIP	0.1uF		25V
C376	1-135-259-11	TANTAL. CHIP	10uF	20%	6.3V
C377	1-162-960-11	CERAMIC CHIP	220PF	10%	50V
C378	1-165-128-11	CERAMIC CHIP	0.22uF		16V
		< CONNECTOR >			
* CN301	1-695-320-21	PIN, CONNECTOR (1.5MM)(SMD) 2P			
* CN302	1-695-320-21	PIN, CONNECTOR (1.5MM)(SMD) 2P			
CN303	1-779-334-11	CONNECTOR, FFC/FPC 20P			
		< DIODE >			
D301	8-719-061-86	DIODE DCR2810			
D302	8-749-060-65	DIODE DCC3810			
D303	8-719-061-82	DIODE TLSU1002(TPX1,SONY)			
D305	8-719-073-01	DIODE MA111-(K8).S0			
D321	8-719-073-03	DIODE MA8082-(K8).S0			
D322	8-719-073-03	DIODE MA8082-(K8).S0			
D323	8-719-073-01	DIODE MA111-(K8).S0			
		< FUSE >			
⚠F301	1-533-874-11	FUSE, MICRO (200mA/24V)			
		< IC >			
IC301	8-749-012-83	IC RS-180-T			
IC322	8-759-494-54	IC AN2900FH-EB			
		< JACK >			
J301	1-691-737-11	JACK (SMALL TYPE)(MIC(PLUG IN POWER))			
		< COIL >			
L301	1-414-754-11	INDUCTOR 10uH			
		< TRANSISTOR >			
Q301	8-729-420-24	TRANSISTOR 2SB1218A-QRS-TX			
Q302	8-729-122-63	TRANSISTOR 2SA1226-T1E4			
Q303	8-729-140-75	TRANSISTOR 2SD999-T1-CLCK			
Q304	8-729-402-42	TRANSISTOR UN5213-TX			
		< RESISTOR >			
R301	1-216-823-11	METAL CHIP	1.5K	5%	1/16W
R302	1-216-810-11	METAL CHIP	120	5%	1/16W
R303	1-216-817-11	METAL CHIP	470	5%	1/16W
R304	1-216-311-00	METAL CHIP	6.8	5%	1/10W
R305	1-216-302-00	METAL CHIP	2.7	5%	1/10W
R306	1-216-864-11	METAL CHIP	0	5%	1/16W
R308	1-216-837-11	METAL CHIP	22K	5%	1/16W
R309	1-216-847-11	METAL CHIP	150K	5%	1/16W
R310	1-216-824-11	METAL CHIP	1.8K	5%	1/16W
R311	1-216-864-11	METAL CHIP	0	5%	1/16W
R312	1-216-864-11	METAL CHIP	0	5%	1/16W
R315	1-216-864-11	METAL CHIP	0	5%	1/16W
R321	1-216-864-11	METAL CHIP	0	5%	1/16W
R322	1-216-864-11	METAL CHIP	0	5%	1/16W
R323	1-216-864-11	METAL CHIP	0	5%	1/16W
R324	1-216-864-11	METAL CHIP	0	5%	1/16W
R339	1-216-831-11	METAL CHIP	6.8K	5%	1/16W
R340	1-216-825-11	METAL CHIP	2.2K	5%	1/16W
R341	1-216-821-11	METAL CHIP	1K	5%	1/16W
R342	1-216-831-11	METAL CHIP	6.8K	5%	1/16W
R343	1-216-829-11	METAL CHIP	4.7K	5%	1/16W
R344	1-216-833-11	METAL CHIP	10K	5%	1/16W
R345	1-216-821-11	METAL CHIP	1K	5%	1/16W
R346	1-216-825-11	METAL CHIP	2.2K	5%	1/16W
R347	1-216-831-11	METAL CHIP	6.8K	5%	1/16W
R348	1-216-831-11	METAL CHIP	6.8K	5%	1/16W
R349	1-216-831-11	METAL CHIP	6.8K	5%	1/16W
R350	1-216-864-11	METAL CHIP	0	5%	1/16W
R351	1-216-839-11	METAL CHIP	33K	5%	1/16W
R352	1-216-839-11	METAL CHIP	33K	5%	1/16W

Note :	**Note :**
The components identified by mark ⚠ or dotted line with mark ⚠ are critical for safety. Replace only with part number specified.	Les composants identifiés par une marque ⚠ sont critiques pour la sécurité. Ne les remplacer que par une pièce portant le numéro spécifié.

Ref. No.	Part No.	Description			Remarks
R353	1-216-839-11	METAL CHIP	33K	5%	1/16W
R354	1-216-829-11	METAL CHIP	4.7K	5%	1/16W
R355	1-216-833-11	METAL CHIP	10K	5%	1/16W
R356	1-216-864-11	METAL CHIP	0	5%	1/16W
R357	1-216-831-11	METAL CHIP	6.8K	5%	1/16W
R358	1-216-839-11	METAL CHIP	33K	5%	1/16W
R359	1-216-835-11	METAL CHIP	15K	5%	1/16W
R360	1-216-835-11	METAL CHIP	15K	5%	1/16W
R361	1-216-835-11	METAL CHIP	15K	5%	1/16W
R362	1-216-835-11	METAL CHIP	15K	5%	1/16W
R363	1-216-830-11	METAL CHIP	5.6K	5%	1/16W
R364	1-216-839-11	METAL CHIP	33K	5%	1/16W
R365	1-216-836-11	METAL CHIP	18K	5%	1/16W
R366	1-216-839-11	METAL CHIP	33K	5%	1/16W
R367	1-216-818-11	METAL CHIP	560	5%	1/16W
R368	1-216-832-11	METAL CHIP	8.2K	5%	1/16W
		< SWITCH >			
S301	1-692-605-11	SWITCH, SLIDE (VIDEO LIGHT)			
S302	1-771-331-41	SWITCH, PUSH (1 KEY)(POWER/VTR)			
* S303	1-771-331-21	SWITCH, PUSH (1 KEY)(POWER/CAMERA)			
	A-7073-842-A	PD-105 BOARD, COMPLETE			
		**********			
		(Ref.No.:10000 Series)			
		< CAPACITOR >			
C5501	1-107-826-91	CERAMIC CHIP	0.1uF	10%	16V
C5502	1-107-826-91	CERAMIC CHIP	0.1uF	10%	16V
C5503	1-162-970-11	CERAMIC CHIP	0.01uF	10%	25V
C5504	1-162-970-11	CERAMIC CHIP	0.01uF	10%	25V
C5505	1-162-970-11	CERAMIC CHIP	0.01uF	10%	25V
C5506	1-164-004-11	CERAMIC CHIP	0.1uF	10%	25V
C5507	1-104-851-11	TANTAL. CHIP	10uF	20%	10V
C5508	1-107-826-91	CERAMIC CHIP	0.1uF	10%	16V
C5509	1-135-180-21	TANTALUM CHIP	3.3uF	20%	6.3V
C5511	1-109-982-11	CERAMIC CHIP	1uF	10%	10V
C5512	1-104-851-11	TANTAL. CHIP	10uF	20%	10V
C5513	1-107-826-91	CERAMIC CHIP	0.1uF	10%	16V
C5514	1-110-501-11	CERAMIC CHIP	0.33uF	10%	16V
C5515	1-110-501-11	CERAMIC CHIP	0.33uF	10%	16V
C5516	1-110-501-11	CERAMIC CHIP	0.33uF	10%	16V
C5517	1-107-826-91	CERAMIC CHIP	0.1uF	10%	16V
C5518	1-109-982-11	CERAMIC CHIP	1uF	10%	10V
C5519	1-104-851-11	TANTAL. CHIP	10uF	20%	10V
C5520	1-107-826-91	CERAMIC CHIP	0.1uF	10%	16V
C5602	1-107-687-11	TANTAL. CHIP	3.3uF	20%	20V
C5603	1-110-501-11	CERAMIC CHIP	0.33uF	10%	16V
C5604	1-107-826-91	CERAMIC CHIP	0.1uF	10%	16V
C5605	1-107-826-91	CERAMIC CHIP	0.1uF	10%	16V
C5607	1-164-004-11	CERAMIC CHIP	0.1uF	10%	25V
C5608	1-164-357-11	CERAMIC CHIP	1000PF	5%	50V
C5610	1-162-926-11	CERAMIC CHIP	82PF	5%	50V
C5612	1-162-926-11	CERAMIC CHIP	82PF	5%	50V
C5616	1-109-982-11	CERAMIC CHIP	1uF	10%	10V
C5620	1-107-826-91	CERAMIC CHIP	0.1uF	10%	16V
C5621	1-135-177-21	TANTALUM CHIP	1uF	20%	20V
C5622	1-107-682-11	CERAMIC CHIP	1uF	10%	16V
C5623	1-107-826-91	CERAMIC CHIP	0.1uF	10%	16V
C5624	1-107-688-11	TANTAL. CHIP	1.5uF	20%	10V
C5625	1-107-688-11	TANTAL. CHIP	1.5uF	20%	10V
C5633	1-162-967-11	CERAMIC CHIP	0.0033uF	10%	50V
C5701	1-113-682-11	TANTAL. CHIP	33uF	20%	10V
C5702	1-164-346-11	CERAMIC CHIP	1uF		16V
C5703	1-164-661-11	CERAMIC CHIP	0.018uF	10%	50V
C5704	1-164-004-11	CERAMIC CHIP	0.1uF	10%	25V
⚠C5705	1-113-521-11	CERAMIC CHIP	12PF	10%	3KV
C5706	1-162-970-11	CERAMIC CHIP	0.01uF	10%	25V
C5801	1-107-826-91	CERAMIC CHIP	0.1uF	10%	16V
		< CONNECTOR >			
* CN5501	1-573-984-11	CONNECTOR, BOARD TO BOARD 10P			
CN5601	1-573-364-11	CONNECTOR, FFC/FPC 24P			
CN5701	1-764-709-11	CONNECTOR, FFC/FPC (LIF) 10P			
CN5801	1-764-532-21	CONNECTOR, FFC/FPC (ZIF) 26P			
CN5802	1-785-627-21	PIN, CONNECTOR (PC BOARD) 10P			
CN5803	1-778-508-21	PIN, CONNECTOR (PC BOARD) 6P			
CN5804	1-778-509-21	PIN, CONNECTOR (PC BOARD) 11P			
CN5805	1-691-344-11	CONNECTOR, FFC/FPC (ZIF) 6P			
		< DIODE >			
D5604	8-719-422-23	DIODE MA8047-TX			
D5605	8-713-102-80	DIODE 1T369-01-T8A			
D5703	8-719-058-86	DIODE PG1101H-TR			
⚠D5704	8-719-073-01	DIODE MA111-(K8).S0			
		< IC >			
IC5501	8-759-364-05	IC M62376GP-65AD			
IC5502	8-759-539-27	IC IR3Y37A4			
IC5601	8-759-530-20	IC CM7017L3-T4			
IC5602	8-759-327-01	IC NJM062V(TE2)			
IC5701	8-759-075-70	IC TA75S393F-TE85R			
IC5801	8-759-573-02	IC BU9735K-E2			
		< COIL >			
L5501	1-414-754-11	INDUCTOR 10uH			
L5502	1-414-754-11	INDUCTOR 10uH			
L5503	1-414-754-11	INDUCTOR 10uH			
L5601	1-414-754-11	INDUCTOR 10uH			
L5603	1-414-754-11	INDUCTOR 10uH			
L5604	1-414-754-11	INDUCTOR 10uH			
L5605	1-412-956-21	INDUCTOR 27uH			
L5701	1-409-536-41	INDUCTOR 150uH			
		< TRANSISTOR >			
Q5501	8-729-037-53	TRANSISTOR 2SA1832F-Y/GR(TPL3)			
Q5601	8-729-042-29	TRANSISTOR RN1104F(TPL3)			
Q5602	8-729-042-29	TRANSISTOR RN1104F(TPL3)			
Q5605	8-729-037-52	TRANSISTOR 2SC4738F-Y/GR(TPL3)			
Q5606	8-729-037-53	TRANSISTOR 2SA1832F-Y/GR(TPL3)			
Q5607	8-729-037-52	TRANSISTOR 2SC4738F-Y/GR(TPL3)			
Q5608	8-729-037-53	TRANSISTOR 2SA1832F-Y/GR(TPL3)			
Q5701	8-729-039-43	TRANSISTOR FP216-TL			
Q5702	8-729-042-58	TRANSISTOR UN9111J-(K8).SO			

Note :
The components identified by mark ⚠ or dotted line with mark ⚠ are critical for safety.
Replace only with part number specified.

Note :
Les composants identifiés par une marque ⚠ sont critiques pour la sécurité.
Ne les remplacer que par une pièce portant le numéro spécifié.

Ref. No.	Part No.	Description			Remarks
		< RESISTOR >			
R5501	1-216-840-11	METAL CHIP	39K	5%	1/16W
R5505	1-216-841-11	METAL CHIP	47K	5%	1/16W
R5512	1-216-837-11	METAL CHIP	22K	5%	1/16W
R5513	1-216-834-11	METAL CHIP	12K	5%	1/16W
R5516	1-216-837-11	METAL CHIP	22K	5%	1/16W
R5517	1-216-835-11	METAL CHIP	15K	5%	1/16W
R5518	1-216-839-11	METAL CHIP	33K	5%	1/16W
R5520	1-216-852-11	METAL CHIP	390K	5%	1/16W
R5521	1-216-834-11	METAL CHIP	12K	5%	1/16W
R5522	1-216-843-11	METAL CHIP	68K	5%	1/16W
R5528	1-218-895-11	RES,CHIP	100K	0.50%	1/16W
R5531	1-216-821-11	METAL CHIP	1K	5%	1/16W
R5532	1-216-841-11	METAL CHIP	47K	5%	1/16W
R5537	1-216-823-11	METAL CHIP	1.5K	5%	1/16W
R5541	1-216-825-11	METAL CHIP	2.2K	5%	1/16W
R5542	1-216-825-11	METAL CHIP	2.2K	5%	1/16W
R5544	1-216-821-11	METAL CHIP	1K	5%	1/16W
R5602	1-216-864-11	METAL CHIP	0	5%	1/16W
R5603	1-216-864-11	METAL CHIP	0	5%	1/16W
R5604	1-216-864-11	METAL CHIP	0	5%	1/16W
R5605	1-216-864-11	METAL CHIP	0	5%	1/16W
R5610	1-216-842-11	METAL CHIP	56K	5%	1/16W
R5612	1-216-833-11	METAL CHIP	10K	5%	1/16W
R5613	1-216-841-11	METAL CHIP	47K	5%	1/16W
R5615	1-216-843-11	METAL CHIP	68K	5%	1/16W
R5617	1-216-833-11	METAL CHIP	10K	5%	1/16W
R5622	1-216-844-11	METAL CHIP	82K	5%	1/16W
R5623	1-216-845-11	METAL CHIP	100K	5%	1/16W
R5624	1-216-841-11	METAL CHIP	47K	5%	1/16W
R5625	1-218-887-11	RES,CHIP	47K	0.50%	1/16W
R5627	1-218-899-11	RES,CHIP	150K	0.50%	1/16W
R5628	1-216-864-11	METAL CHIP	0	5%	1/16W
R5630	1-216-821-11	METAL CHIP	1K	5%	1/16W
R5640	1-216-845-11	METAL CHIP	100K	5%	1/16W
R5641	1-216-839-11	METAL CHIP	33K	5%	1/16W
R5643	1-216-845-11	METAL CHIP	100K	5%	1/16W
R5644	1-216-839-11	METAL CHIP	33K	5%	1/16W
R5647	1-216-864-11	METAL CHIP	0	5%	1/16W
R5648	1-216-864-11	METAL CHIP	0	5%	1/16W
R5652	1-216-864-11	METAL CHIP	0	5%	1/16W
R5663	1-216-864-11	METAL CHIP	0	5%	1/16W
R5664	1-216-864-11	METAL CHIP	0	5%	1/16W
R5665	1-216-864-11	METAL CHIP	0	5%	1/16W
R5666	1-216-864-11	METAL CHIP	0	5%	1/16W
R5667	1-216-864-11	METAL CHIP	0	5%	1/16W
R5668	1-216-864-11	METAL CHIP	0	5%	1/16W
R5672	1-216-849-11	METAL CHIP	220K	5%	1/16W
R5673	1-216-864-11	METAL CHIP	0	5%	1/16W
R5678	1-216-864-11	METAL CHIP	0	5%	1/16W
R5682	1-216-805-11	METAL CHIP	47	5%	1/16W
R5683	1-216-805-11	METAL CHIP	47	5%	1/16W
R5684	1-216-805-11	METAL CHIP	47	5%	1/16W
R5685	1-216-845-11	METAL CHIP	100K	5%	1/16W
R5686	1-216-845-11	METAL CHIP	100K	5%	1/16W
R5688	1-216-864-11	METAL CHIP	0	5%	1/16W
R5692	1-216-851-11	METAL CHIP	330K	5%	1/16W
R5694	1-216-839-11	METAL CHIP	33K	5%	1/16W
R5695	1-216-833-11	METAL CHIP	10K	5%	1/16W
R5697	1-216-864-11	METAL CHIP	0	5%	1/16W
R5698	1-216-864-11	METAL CHIP	0	5%	1/16W
R5703	1-216-055-00	METAL CHIP	1.8K	5%	1/10W
R5704	1-216-055-00	METAL CHIP	1.8K	5%	1/10W
R5705	1-216-845-11	METAL CHIP	100K	5%	1/16W
R5706	1-216-831-11	METAL CHIP	6.8K	5%	1/16W
R5707	1-216-837-11	METAL CHIP	22K	5%	1/16W
R5708	1-216-810-11	METAL CHIP	120	5%	1/16W
R5709	1-216-817-11	METAL CHIP	470	5%	1/16W
R5710	1-216-864-11	METAL CHIP	0	5%	1/16W
R5801	1-216-823-11	METAL CHIP	1.5K	5%	1/16W
R5802	1-216-825-11	METAL CHIP	2.2K	5%	1/16W
R5803	1-216-828-11	METAL CHIP	3.9K	5%	1/16W
R5804	1-216-832-11	METAL CHIP	8.2K	5%	1/16W
R5805	1-216-838-11	METAL CHIP	27K	5%	1/16W
R5806	1-216-822-11	METAL CHIP	1.2K	5%	1/16W
R5807	1-216-809-11	METAL CHIP	100	5%	1/16W
R5808	1-216-809-11	METAL CHIP	100	5%	1/16W
R5811	1-216-864-11	METAL CHIP	0	5%	1/16W
R5812	1-216-855-11	METAL CHIP	680K	5%	1/16W
		< SWITCH >			
S5801	1-692-088-41	SWITCH, TACTILE (LCD BRIGHT +)			
S5802	1-692-088-41	SWITCH, TACTILE (LCD BRIGHT -)			
S5803	1-692-088-41	SWITCH, TACTILE (VOLUME +)			
S5804	1-692-088-41	SWITCH, TACTILE (VOLUME -)			
		< TRANSFORMER >			
⚠T5701	1-433-452-11	TRANSFORMER, INVERTER			
	A-7073-837-A	PJ-92 BOARD, COMPLETE			
		**********			
		(Ref.No.:2000 Series)			
		< CAPACITOR >			
C101	1-110-569-11	TANTAL. CHIP	47uF	20%	6.3V
		< CONNECTOR >			
* CN101	1-764-521-11	CONNECTOR, FFC/FPC (ZIF) 12P			
		< DIODE >			
D101	8-719-062-16	DIODE 01ZA8.2(TPL3)			
D102	8-719-062-16	DIODE 01ZA8.2(TPL3)			
D103	8-719-062-16	DIODE 01ZA8.2(TPL3)			
D104	8-719-073-03	DIODE MA8082-(K8).S0			
D105	8-719-062-16	DIODE 01ZA8.2(TPL3)			
D105	8-719-045-87	DIODE MA4Z082WA-(K8).SO			
D106	8-719-062-16	DIODE 01ZA8.2(TPL3)			
		< JACK >			
J101	1-537-747-21	TERMINAL BOARD (S VIDEO/VIDEO/AUDIO)			

Note :
The components identified by mark ⚠ or dotted line with mark ⚠ are critical for safety.
Replace only with part number specified.

Note :
Les composants identifiés par une marque ⚠ sont critiques pour la sécurité.
Ne les remplacer que par une pièce portant le numéro spécifié.

PJ-92 **SE-83** **VC-214**

Ref. No.	Part No.	Description			Remarks
		< COIL >			
L101	1-414-072-11	INDUCTOR 1uH			
L102	1-216-295-91	SHORT 0			(Note)
L103	1-216-295-91	SHORT 0			(Note)
L104	1-216-295-91	SHORT 0			(Note)
		< TRANSISTOR >			
Q101	8-729-101-07	TRANSISTOR 2SB798-T1-DLDK			
Q102	8-729-037-52	TRANSISTOR 2SC4738F-Y/GR(TPL3)			
		< RESISTOR >			
R101	1-216-864-11	METAL CHIP	0	5%	1/16W
R102	1-216-138-00	METAL CHIP	3.3	5%	1/8W
R103	1-216-830-11	METAL CHIP	5.6K	5%	1/16W
R104	1-216-820-11	METAL CHIP	820	5%	1/16W
R105	1-216-836-11	METAL CHIP	18K	5%	1/16W
R106	1-216-864-11	METAL CHIP	0	5%	1/16W
R107	1-216-864-11	METAL CHIP	0	5%	1/16W
R108	1-216-821-11	METAL CHIP	1K	5%	1/16W
R109	1-216-821-11	METAL CHIP	1K	5%	1/16W
	A-7073-836-A	SE-83 (M) BOARD, COMPLETE			
		**********			
		(Ref.No.:2000 Series)			
		< CAPACITOR >			
C451	1-164-004-11	CERAMIC CHIP	0.1uF	10%	25V
C452	1-164-004-11	CERAMIC CHIP	0.1uF	10%	25V
C453	1-104-847-11	TANTAL. CHIP	22uF	20%	4V
C454	1-104-847-11	TANTAL. CHIP	22uF	20%	4V
C457	1-164-343-11	CERAMIC CHIP	0.056uF	10%	25V
C458	1-164-343-11	CERAMIC CHIP	0.056uF	10%	25V
C459	1-164-343-11	CERAMIC CHIP	0.056uF	10%	25V
C460	1-110-666-11	ELECT CHIP	22uF	20%	6.3V
C461	1-164-343-11	CERAMIC CHIP	0.056uF	10%	25V
C462	1-110-666-11	ELECT CHIP	22uF	20%	6.3V
C464	1-110-501-11	CERAMIC CHIP	0.33uF	10%	16V
C465	1-135-201-11	TANTALUM CHIP	10uF	20%	4V
C466	1-162-970-11	CERAMIC CHIP	0.01uF	10%	25V
		< CONNECTOR >			
CN451	1-691-348-11	CONNECTOR, FFC/FPC (ZIF) 10P			
		< DIODE >			
D451	8-719-062-16	DIODE 01ZA8.2(TPL3)			
D452	8-719-062-16	DIODE 01ZA8.2(TPL3)			
		< IC >			
IC451	8-759-489-19	IC uPC6756GR-8JG-E2			
		< JACK >			
J451	1-695-514-21	JACK (SMALL TYPE) 1P (HEADPHONE)			
		< COIL >			
L451	1-414-754-11	INDUCTOR 10uH			
L453	1-216-295-91	SHORT 0			(Note)
L454	1-216-295-91	SHORT 0			(Note)

Note : Resistors are mounted to the location where L102, L103, L104, L453, L454 are printed.

Ref. No.	Part No.	Description			Remarks
		< RESISTOR >			
R451	1-216-837-11	METAL CHIP	22K	5%	1/16W
R452	1-216-837-11	METAL CHIP	22K	5%	1/16W
R453	1-216-837-11	METAL CHIP	22K	5%	1/16W
R454	1-216-837-11	METAL CHIP	22K	5%	1/16W
R456	1-216-857-11	METAL CHIP	1M	5%	1/16W
R457	1-216-833-11	METAL CHIP	10K	5%	1/16W
R458	1-216-833-11	METAL CHIP	10K	5%	1/16W
R459	1-216-857-11	METAL CHIP	1M	5%	1/16W
R461	1-216-835-11	METAL CHIP	15K	5%	1/16W
		< SENSOR >			
SE451	1-803-042-31	SENSOR, ANGULAR VELOCITY (PITCH)			
SE452	1-803-042-41	SENSOR, ANGULAR VELOCITY (YAW)			
	A-7094-199-A	VC-214 (VIBU) BOARD, COMPLETE			
		(SERVICE ASSY)			
		**********			
		(Ref.No.:1000 Series)			
		< CAPACITOR >			
C001	1-162-970-11	CERAMIC CHIP	0.01uF	10%	25V
C004	1-162-970-11	CERAMIC CHIP	0.01uF	10%	25V
C006	1-104-752-11	TANTAL. CHIP	33uF	20%	6.3V
C007	1-104-752-11	TANTAL. CHIP	33uF	20%	6.3V
C008	1-162-927-11	CERAMIC CHIP	100PF	5%	50V
C009	1-164-217-11	CERAMIC CHIP	150PF	5%	50V
C011	1-162-926-11	CERAMIC CHIP	82PF	5%	50V
C012	1-162-927-11	CERAMIC CHIP	100PF	5%	50V
C021	1-164-156-11	CERAMIC CHIP	0.1uF		25V
C022	1-162-970-11	CERAMIC CHIP	0.01uF	10%	25V
C024	1-164-227-11	CERAMIC CHIP	0.022uF	10%	25V
C027	1-162-970-11	CERAMIC CHIP	0.01uF	10%	25V
C028	1-135-259-11	TANTAL. CHIP	10uF	20%	6.3V
C029	1-162-970-11	CERAMIC CHIP	0.01uF	10%	25V
C030	1-162-970-11	CERAMIC CHIP	0.01uF	10%	25V
C031	1-162-970-11	CERAMIC CHIP	0.01uF	10%	25V
C032	1-164-227-11	CERAMIC CHIP	0.022uF	10%	25V
C034	1-107-826-91	CERAMIC CHIP	0.1uF	10%	16V
C035	1-162-920-11	CERAMIC CHIP	27PF	5%	50V
C036	1-162-970-11	CERAMIC CHIP	0.01uF	10%	25V
C037	1-162-970-11	CERAMIC CHIP	0.01uF	10%	25V
C038	1-135-259-11	TANTAL. CHIP	10uF	20%	6.3V
C039	1-162-970-11	CERAMIC CHIP	0.01uF	10%	25V
C040	1-162-970-11	CERAMIC CHIP	0.01uF	10%	25V
C041	1-107-826-91	CERAMIC CHIP	0.1uF	10%	16V
C042	1-162-970-11	CERAMIC CHIP	0.01uF	10%	25V
C045	1-162-970-11	CERAMIC CHIP	0.01uF	10%	25V
C048	1-162-970-11	CERAMIC CHIP	0.01uF	10%	25V
C049	1-162-970-11	CERAMIC CHIP	0.01uF	10%	25V
C050	1-162-970-11	CERAMIC CHIP	0.01uF	10%	25V
C052	1-162-970-11	CERAMIC CHIP	0.01uF	10%	25V
C053	1-162-970-11	CERAMIC CHIP	0.01uF	10%	25V
C055	1-162-928-11	CERAMIC CHIP	120PF	5%	50V
C058	1-162-968-11	CERAMIC CHIP	0.0047uF	10%	50V
C059	1-162-928-11	CERAMIC CHIP	120PF	5%	50V

Ref. No.	Part No.	Description			Remarks
C060	1-163-809-11	CERAMIC CHIP	0.047uF	10%	25V
C061	1-162-970-11	CERAMIC CHIP	0.01uF	10%	25V
C062	1-162-926-11	CERAMIC CHIP	82PF	5%	50V
C065	1-162-970-11	CERAMIC CHIP	0.01uF	10%	25V
C068	1-162-921-11	CERAMIC CHIP	33PF	5%	50V
C069	1-162-970-11	CERAMIC CHIP	0.01uF	10%	25V
C070	1-162-908-11	CERAMIC CHIP	3PF	0.25PF	50V
C071	1-104-752-11	TANTAL. CHIP	33uF	20%	6.3V
C072	1-162-958-11	CERAMIC CHIP	270PF	5%	50V
C073	1-164-392-11	CERAMIC CHIP	390PF	5%	50V
C074	1-162-915-11	CERAMIC CHIP	10PF	0.5PF	50V
C075	1-162-959-11	CERAMIC CHIP	330PF	5%	50V
C076	1-162-921-11	CERAMIC CHIP	33PF	5%	50V
C078	1-162-928-11	CERAMIC CHIP	120PF	5%	50V
C079	1-162-922-11	CERAMIC CHIP	39PF	5%	50V
C080	1-162-915-11	CERAMIC CHIP	10PF	0.5PF	50V
C081	1-162-916-11	CERAMIC CHIP	12PF	5%	50V
C082	1-162-915-11	CERAMIC CHIP	10PF	0.5PF	50V
C083	1-162-926-11	CERAMIC CHIP	82PF	5%	50V
C085	1-162-970-11	CERAMIC CHIP	0.01uF	10%	25V
C086	1-115-156-11	CERAMIC CHIP	1uF		10V
C088	1-162-925-11	CERAMIC CHIP	68PF	5%	50V
C089	1-162-923-11	CERAMIC CHIP	47PF	5%	50V
C090	1-162-958-11	CERAMIC CHIP	270PF	5%	50V
C152	1-162-970-11	CERAMIC CHIP	0.01uF	10%	25V
C156	1-164-677-11	CERAMIC CHIP	0.033uF	10%	16V
C157	1-162-964-11	CERAMIC CHIP	0.001uF	10%	50V
C158	1-162-970-11	CERAMIC CHIP	0.01uF	10%	25V
C159	1-164-346-11	CERAMIC CHIP	1uF		16V
C160	1-162-970-11	CERAMIC CHIP	0.01uF	10%	25V
C161	1-115-467-11	CERAMIC CHIP	0.22uF	10%	10V
C162	1-135-180-21	TANTALUM CHIP	3.3uF	20%	6.3V
C163	1-135-180-21	TANTALUM CHIP	3.3uF	20%	6.3V
C164	1-162-970-11	CERAMIC CHIP	0.01uF	10%	25V
C166	1-162-970-11	CERAMIC CHIP	0.01uF	10%	25V
C168	1-109-982-11	CERAMIC CHIP	1uF	10%	10V
C169	1-109-982-11	CERAMIC CHIP	1uF	10%	10V
C170	1-162-970-11	CERAMIC CHIP	0.01uF	10%	25V
C171	1-162-970-11	CERAMIC CHIP	0.01uF	10%	25V
C172	1-110-501-11	CERAMIC CHIP	0.33uF	10%	16V
C173	1-164-227-11	CERAMIC CHIP	0.022uF	10%	25V
C174	1-164-217-11	CERAMIC CHIP	150PF	5%	50V
C175	1-162-964-11	CERAMIC CHIP	0.001uF	10%	50V
C177	1-162-927-11	CERAMIC CHIP	100PF	5%	50V
C178	1-162-970-11	CERAMIC CHIP	0.01uF	10%	25V
C179	1-162-919-11	CERAMIC CHIP	22PF	5%	50V
C180	1-115-467-11	CERAMIC CHIP	0.22uF	10%	10V
C181	1-162-970-11	CERAMIC CHIP	0.01uF	10%	25V
C182	1-135-149-21	TANTALUM CHIP	2.2uF	20%	10V
C183	1-135-149-21	TANTALUM CHIP	2.2uF	20%	10V
C184	1-115-156-11	CERAMIC CHIP	1uF		10V
C185	1-126-246-11	ELECT CHIP	220uF	20%	4V
C187	1-126-246-11	ELECT CHIP	220uF	20%	4V
C188	1-135-259-11	TANTAL. CHIP	10uF	20%	6.3V
C190	1-107-826-91	CERAMIC CHIP	0.1uF	10%	16V

Ref. No.	Part No.	Description			Remarks
C191	1-162-970-11	CERAMIC CHIP	0.01uF	10%	25V
C192	1-119-750-11	TANTAL. CHIP	22uF	20%	6.3V
C202	1-135-259-11	TANTAL. CHIP	10uF	20%	6.3V
C204	1-162-964-11	CERAMIC CHIP	0.001uF	10%	50V
C205	1-115-156-11	CERAMIC CHIP	1uF		10V
C206	1-162-967-11	CERAMIC CHIP	0.0033uF	10%	50V
C207	1-162-965-11	CERAMIC CHIP	0.0015uF	10%	50V
C209	1-162-915-11	CERAMIC CHIP	10PF	0.5PF	50V
C210	1-162-922-11	CERAMIC CHIP	39PF	5%	50V
C211	1-135-181-21	TANTALUM CHIP	4.7uF	20%	6.3V
C212	1-164-392-11	CERAMIC CHIP	390PF	5%	50V
C217	1-162-970-11	CERAMIC CHIP	0.01uF	10%	25V
C218	1-107-823-11	CERAMIC CHIP	0.47uF	10%	16V
C219	1-109-982-11	CERAMIC CHIP	1uF	10%	10V
C224	1-162-927-11	CERAMIC CHIP	100PF	5%	50V
C225	1-162-970-11	CERAMIC CHIP	0.01uF	10%	25V
C226	1-109-982-11	CERAMIC CHIP	1uF	10%	10V
C227	1-135-201-11	TANTALUM CHIP	10uF	20%	4V
C229	1-162-970-11	CERAMIC CHIP	0.01uF	10%	25V
C230	1-115-156-11	CERAMIC CHIP	1uF		10V
C232	1-164-156-11	CERAMIC CHIP	0.1uF		25V
C233	1-135-201-11	TANTALUM CHIP	10uF	20%	4V
C234	1-162-970-11	CERAMIC CHIP	0.01uF	10%	25V
C235	1-162-970-11	CERAMIC CHIP	0.01uF	10%	25V
C237	1-164-156-11	CERAMIC CHIP	0.1uF		25V
C239	1-115-156-11	CERAMIC CHIP	1uF		10V
C243	1-162-970-11	CERAMIC CHIP	0.01uF	10%	25V
C244	1-115-156-11	CERAMIC CHIP	1uF		10V
C245	1-162-970-11	CERAMIC CHIP	0.01uF	10%	25V
C246	1-162-970-11	CERAMIC CHIP	0.01uF	10%	25V
C247	1-135-201-11	TANTALUM CHIP	10uF	20%	4V
C250	1-162-970-11	CERAMIC CHIP	0.01uF	10%	25V
C252	1-135-259-11	TANTAL. CHIP	10uF	20%	6.3V
C253	1-107-826-91	CERAMIC CHIP	0.1uF	10%	16V
C301	1-135-201-11	TANTALUM CHIP	10uF	20%	4V
C302	1-135-201-11	TANTALUM CHIP	10uF	20%	4V
C307	1-135-180-21	TANTALUM CHIP	3.3uF	20%	6.3V
C308	1-135-259-11	TANTAL. CHIP	10uF	20%	6.3V
C309	1-104-847-11	TANTAL. CHIP	22uF	20%	4V
C310	1-104-847-11	TANTAL. CHIP	22uF	20%	4V
C312	1-107-823-11	CERAMIC CHIP	0.47uF	10%	16V
C313	1-115-467-11	CERAMIC CHIP	0.22uF	10%	10V
C314	1-109-982-11	CERAMIC CHIP	1uF	10%	10V
C316	1-115-467-11	CERAMIC CHIP	0.22uF	10%	10V
C317	1-115-467-11	CERAMIC CHIP	0.22uF	10%	10V
C318	1-135-259-11	TANTAL. CHIP	10uF	20%	6.3V
C319	1-115-467-11	CERAMIC CHIP	0.22uF	10%	10V
C321	1-216-841-11	METAL CHIP	47K	5%	1/16W (Note)
C322	1-164-489-11	CERAMIC CHIP	0.22uF	10%	16V
C323	1-216-864-11	METAL CHIP	0	5%	1/16W (Note)
C324	1-109-982-11	CERAMIC CHIP	1uF	10%	10V
C325	1-107-826-91	CERAMIC CHIP	0.1uF	10%	16V
C326	1-109-982-11	CERAMIC CHIP	1uF	10%	10V
C328	1-109-982-11	CERAMIC CHIP	1uF	10%	10V
C330	1-109-982-11	CERAMIC CHIP	1uF	10%	10V

Note : Resistors are mounted to the location where C321, C323 are printed.

VC-214

Ref. No.	Part No.	Description			Remarks
C331	1-107-826-91	CERAMIC CHIP	0.1uF	10%	16V
C332	1-109-982-11	CERAMIC CHIP	1uF	10%	10V
C334	1-115-467-11	CERAMIC CHIP	0.22uF	10%	10V
C336	1-109-982-11	CERAMIC CHIP	1uF	10%	10V
C337	1-109-982-11	CERAMIC CHIP	1uF	10%	10V
C338	1-164-489-11	CERAMIC CHIP	0.22uF	10%	16V
C339	1-164-489-11	CERAMIC CHIP	0.22uF	10%	16V
C340	1-107-823-11	CERAMIC CHIP	0.47uF	10%	16V
C341	1-107-823-11	CERAMIC CHIP	0.47uF	10%	16V
C342	1-162-963-11	CERAMIC CHIP	680PF	10%	50V
C343	1-162-966-11	CERAMIC CHIP	0.0022uF	10%	50V
C344	1-162-963-11	CERAMIC CHIP	680PF	10%	50V
C345	1-164-182-11	CERAMIC CHIP	0.0033uF	10%	50V
C346	1-162-970-11	CERAMIC CHIP	0.01uF	10%	25V
C347	1-162-970-11	CERAMIC CHIP	0.01uF	10%	25V
C371	1-104-908-11	TANTAL. CHIP	47uF	20%	4V
C372	1-104-908-11	TANTAL. CHIP	47uF	20%	4V
C378	1-135-259-11	TANTAL. CHIP	10uF	20%	6.3V
C380	1-135-259-11	TANTAL. CHIP	10uF	20%	6.3V
C381	1-164-346-11	CERAMIC CHIP	1uF		16V
C382	1-164-227-11	CERAMIC CHIP	0.022uF	10%	25V
C383	1-107-826-91	CERAMIC CHIP	0.1uF	10%	16V
C384	1-107-826-91	CERAMIC CHIP	0.1uF	10%	16V
C385	1-107-826-91	CERAMIC CHIP	0.1uF	10%	16V
C386	1-107-826-91	CERAMIC CHIP	0.1uF	10%	16V
C387	1-104-847-11	TANTAL. CHIP	22uF	20%	4V
C388	1-162-961-11	CERAMIC CHIP	330PF	10%	50V
C389	1-162-925-11	CERAMIC CHIP	68PF	5%	50V
C402	1-109-982-11	CERAMIC CHIP	1uF	10%	10V
C404	1-162-915-11	CERAMIC CHIP	10PF	0.5PF	50V
C405	1-162-915-11	CERAMIC CHIP	10PF	0.5PF	50V
C406	1-162-970-11	CERAMIC CHIP	0.01uF	10%	25V
C410	1-109-982-11	CERAMIC CHIP	1uF	10%	10V
C411	1-162-969-11	CERAMIC CHIP	0.0068uF	10%	25V
C412	1-162-969-11	CERAMIC CHIP	0.0068uF	10%	25V
C414	1-107-826-91	CERAMIC CHIP	0.1uF	10%	16V
C415	1-164-156-11	CERAMIC CHIP	0.1uF		25V
C416	1-164-156-11	CERAMIC CHIP	0.1uF		25V
C417	1-164-156-11	CERAMIC CHIP	0.1uF		25V
C418	1-164-156-11	CERAMIC CHIP	0.1uF		25V
C419	1-164-156-11	CERAMIC CHIP	0.1uF		25V
C420	1-162-970-11	CERAMIC CHIP	0.01uF	10%	25V
C421	1-162-970-11	CERAMIC CHIP	0.01uF	10%	25V
C501	1-162-919-11	CERAMIC CHIP	22PF	5%	50V
C502	1-162-964-11	CERAMIC CHIP	0.001uF	10%	50V
C503	1-162-919-11	CERAMIC CHIP	22PF	5%	50V
C506	1-115-156-11	CERAMIC CHIP	1uF		10V
C507	1-115-156-11	CERAMIC CHIP	1uF		10V
C509	1-135-214-21	TANTAL. CHIP	4.7uF	20%	20V
C510	1-135-201-11	TANTALUM CHIP	10uF	20%	4V
C512	1-107-826-91	CERAMIC CHIP	0.1uF	10%	16V
C513	1-115-156-11	CERAMIC CHIP	1uF		10V
C514	1-162-964-11	CERAMIC CHIP	0.001uF	10%	50V
C516	1-107-826-91	CERAMIC CHIP	0.1uF	10%	16V
C517	1-115-467-11	CERAMIC CHIP	0.22uF	10%	10V
C518	1-162-964-11	CERAMIC CHIP	0.001uF	10%	50V
C519	1-107-826-91	CERAMIC CHIP	0.1uF	10%	16V
C520	1-162-970-11	CERAMIC CHIP	0.01uF	10%	25V
C521	1-107-826-91	CERAMIC CHIP	0.1uF	10%	16V
C522	1-107-826-91	CERAMIC CHIP	0.1uF	10%	16V
C523	1-115-467-11	CERAMIC CHIP	0.22uF	10%	10V
C524	1-162-962-11	CERAMIC CHIP	470PF	10%	50V
C525	1-162-970-11	CERAMIC CHIP	0.01uF	10%	25V
C526	1-107-826-91	CERAMIC CHIP	0.1uF	10%	16V
C527	1-107-826-91	CERAMIC CHIP	0.1uF	10%	16V
C528	1-109-982-11	CERAMIC CHIP	1uF	10%	10V
C529	1-107-826-91	CERAMIC CHIP	0.1uF	10%	16V
C530	1-107-826-91	CERAMIC CHIP	0.1uF	10%	16V
C531	1-104-847-11	TANTAL. CHIP	22uF	20%	4V
C532	1-162-917-11	CERAMIC CHIP	15PF	5%	50V
C533	1-162-917-11	CERAMIC CHIP	15PF	5%	50V
C536	1-163-021-91	CERAMIC CHIP	0.01uF	10%	50V
C552	1-162-968-11	CERAMIC CHIP	0.0047uF	10%	50V
C553	1-162-970-11	CERAMIC CHIP	0.01uF	10%	25V
C554	1-162-970-11	CERAMIC CHIP	0.01uF	10%	25V
C555	1-107-826-91	CERAMIC CHIP	0.1uF	10%	16V
C556	1-162-970-11	CERAMIC CHIP	0.01uF	10%	25V
C557	1-162-962-11	CERAMIC CHIP	470PF	10%	50V
C558	1-164-489-11	CERAMIC CHIP	0.22uF	10%	16V
C559	1-162-970-11	CERAMIC CHIP	0.01uF	10%	25V
C560	1-164-156-11	CERAMIC CHIP	0.1uF		25V
C561	1-162-970-11	CERAMIC CHIP	0.01uF	10%	25V
C562	1-162-966-11	CERAMIC CHIP	0.0022uF	10%	50V
C563	1-162-970-11	CERAMIC CHIP	0.01uF	10%	25V
C564	1-104-752-11	TANTAL. CHIP	33uF	20%	6.3V
C565	1-107-823-11	CERAMIC CHIP	0.47uF	10%	16V
C566	1-115-156-11	CERAMIC CHIP	1uF		10V
C567	1-162-964-11	CERAMIC CHIP	0.001uF	10%	50V
C569	1-164-004-11	CERAMIC CHIP	0.1uF	10%	25V
C570	1-162-970-11	CERAMIC CHIP	0.01uF	10%	25V
C571	1-135-259-11	TANTAL. CHIP	10uF	20%	6.3V
C572	1-135-201-11	TANTALUM CHIP	10uF	20%	4V
C605	1-115-156-11	CERAMIC CHIP	1uF		10V
C607	1-164-156-11	CERAMIC CHIP	0.1uF		25V
C610	1-164-156-11	CERAMIC CHIP	0.1uF		25V
C611	1-164-156-11	CERAMIC CHIP	0.1uF		25V
C612	1-119-749-11	TANTAL. CHIP	33uF	20%	4V
C613	1-104-851-11	TANTAL. CHIP	10uF	20%	10V
C615	1-164-156-11	CERAMIC CHIP	0.1uF		25V
C616	1-164-156-11	CERAMIC CHIP	0.1uF		25V
C617	1-162-970-11	CERAMIC CHIP	0.01uF	10%	25V
C618	1-162-970-11	CERAMIC CHIP	0.01uF	10%	25V
C619	1-162-970-11	CERAMIC CHIP	0.01uF	10%	25V
C620	1-162-970-11	CERAMIC CHIP	0.01uF	10%	25V
C621	1-162-970-11	CERAMIC CHIP	0.01uF	10%	25V
C622	1-162-970-11	CERAMIC CHIP	0.01uF	10%	25V
C623	1-162-970-11	CERAMIC CHIP	0.01uF	10%	25V
C624	1-162-970-11	CERAMIC CHIP	0.01uF	10%	25V
C625	1-164-156-11	CERAMIC CHIP	0.1uF		25V
C626	1-164-156-11	CERAMIC CHIP	0.1uF		25V

Ref. No.	Part No.	Description			Remarks
C627	1-164-227-11	CERAMIC CHIP	0.022uF	10%	25V
C628	1-162-919-11	CERAMIC CHIP	22PF	5%	50V
C629	1-162-917-11	CERAMIC CHIP	15PF	5%	50V
C630	1-164-156-11	CERAMIC CHIP	0.1uF		25V
C634	1-164-156-11	CERAMIC CHIP	0.1uF		25V
C636	1-164-156-11	CERAMIC CHIP	0.1uF		25V
C637	1-162-969-11	CERAMIC CHIP	0.0068uF	10%	25V
C751	1-135-201-11	TANTALUM CHIP	10uF	20%	4V
C752	1-135-259-11	TANTAL. CHIP	10uF	20%	6.3V
C753	1-162-970-11	CERAMIC CHIP	0.01uF	10%	25V
C754	1-107-823-11	CERAMIC CHIP	0.47uF	10%	16V
C755	1-107-823-11	CERAMIC CHIP	0.47uF	10%	16V
C757	1-135-177-21	TANTALUM CHIP	1uF	20%	20V
C758	1-109-982-11	CERAMIC CHIP	1uF	10%	10V
C759	1-162-970-11	CERAMIC CHIP	0.01uF	10%	25V
C760	1-135-181-21	TANTALUM CHIP	4.7uF	20%	6.3V
C761	1-162-970-11	CERAMIC CHIP	0.01uF	10%	25V
C762	1-164-668-11	CERAMIC CHIP	510PF	5%	50V
C763	1-162-970-11	CERAMIC CHIP	0.01uF	10%	25V
C764	1-135-259-11	TANTAL. CHIP	10uF	20%	6.3V
C765	1-162-970-11	CERAMIC CHIP	0.01uF	10%	25V
C766	1-109-982-11	CERAMIC CHIP	1uF	10%	10V
C767	1-107-826-91	CERAMIC CHIP	0.1uF	10%	16V
C768	1-162-909-11	CERAMIC CHIP	4PF	0.25PF	50V
C769	1-107-823-11	CERAMIC CHIP	0.47uF	10%	16V
C770	1-107-823-11	CERAMIC CHIP	0.47uF	10%	16V
C771	1-162-921-11	CERAMIC CHIP	33PF	5%	50V
C772	1-109-982-11	CERAMIC CHIP	1uF	10%	10V
C773	1-162-922-11	CERAMIC CHIP	39PF	5%	50V
C774	1-109-982-11	CERAMIC CHIP	1uF	10%	10V
C775	1-107-826-91	CERAMIC CHIP	0.1uF	10%	16V
C777	1-162-970-11	CERAMIC CHIP	0.01uF	10%	25V
C778	1-162-970-11	CERAMIC CHIP	0.01uF	10%	25V
C781	1-104-847-11	TANTAL. CHIP	22uF	20%	4V
C801	1-107-826-91	CERAMIC CHIP	0.1uF	10%	16V
C802	1-107-826-91	CERAMIC CHIP	0.1uF	10%	16V
C803	1-107-826-91	CERAMIC CHIP	0.1uF	10%	16V
C804	1-162-968-11	CERAMIC CHIP	0.0047uF	10%	50V
C805	1-162-968-11	CERAMIC CHIP	0.0047uF	10%	50V
C806	1-107-826-91	CERAMIC CHIP	0.1uF	10%	16V
C807	1-162-968-11	CERAMIC CHIP	0.0047uF	10%	50V
C808	1-107-826-91	CERAMIC CHIP	0.1uF	10%	16V
C809	1-107-826-91	CERAMIC CHIP	0.1uF	10%	16V
C810	1-162-970-11	CERAMIC CHIP	0.01uF	10%	25V
C811	1-165-176-11	CERAMIC CHIP	0.047uF	10%	16V
C812	1-162-970-11	CERAMIC CHIP	0.01uF	10%	25V
C813	1-165-176-11	CERAMIC CHIP	0.047uF	10%	16V
C814	1-107-826-91	CERAMIC CHIP	0.1uF	10%	16V
C815	1-109-982-11	CERAMIC CHIP	1uF	10%	10V
C816	1-162-962-11	CERAMIC CHIP	470PF	10%	50V
C818	1-162-968-11	CERAMIC CHIP	0.0047uF	10%	50V
C819	1-165-176-11	CERAMIC CHIP	0.047uF	10%	16V
C820	1-107-826-91	CERAMIC CHIP	0.1uF	10%	16V
C821	1-162-970-11	CERAMIC CHIP	0.01uF	10%	25V
C822	1-162-970-11	CERAMIC CHIP	0.01uF	10%	25V
C823	1-164-156-11	CERAMIC CHIP	0.1uF		25V
C824	1-164-227-11	CERAMIC CHIP	0.022uF	10%	25V
C825	1-162-964-11	CERAMIC CHIP	0.001uF	10%	50V
C826	1-162-964-11	CERAMIC CHIP	0.001uF	10%	50V
C827	1-165-176-11	CERAMIC CHIP	0.047uF	10%	16V
C829	1-165-176-11	CERAMIC CHIP	0.047uF	10%	16V
C831	1-164-227-11	CERAMIC CHIP	0.022uF	10%	25V
C834	1-164-156-11	CERAMIC CHIP	0.1uF		25V
C835	1-164-156-11	CERAMIC CHIP	0.1uF		25V
C837	1-164-505-11	CERAMIC CHIP	2.2uF		16V
C838	1-164-156-11	CERAMIC CHIP	0.1uF		25V
C839	1-164-816-11	CERAMIC CHIP	220PF	2%	50V
C840	1-107-826-91	CERAMIC CHIP	0.1uF	10%	16V

< CONNECTOR >

CN001	1-766-677-21	CONNECTOR, FFC/FPC 16P
CN501	1-779-332-11	CONNECTOR, FFC/FPC 16P
CN551	1-691-362-11	CONNECTOR, FFC/FPC (ZIF) 24P
CN901	1-766-644-21	CONNECTOR, FFC/FPC 8P
CN903	1-766-350-21	CONNECTOR, FFC/FPC 20P
CN904	1-774-644-21	CONNECTOR, FFC/FPC 22P
CN905	1-766-646-21	CONNECTOR, FFC/FPC 10P
CN906	1-766-342-21	CONNECTOR, FFC/FPC 12P
CN908	1-766-345-21	CONNECTOR, FFC/FPC 15P
CN909	1-774-635-21	CONNECTOR, FFC/FPC 10P
CN910	1-766-677-21	CONNECTOR, FFC/FPC 16P
CN911	1-778-637-21	CONNECTOR, FFC/FPC (ZIF) 50P
CN914	1-774-600-41	CONNECTOR, BOARD TO BOARD 70P

< DIODE >

D002	8-719-073-01	DIODE MA111-(K8).S0
D201	8-719-055-86	DIODE KV1470TL1-3
D202	8-719-055-86	DIODE KV1470TL1-3
D371	8-719-073-01	DIODE MA111-(K8).S0
D502	8-713-103-84	DIODE 1T379-01-T8A
D551	8-719-073-01	DIODE MA111-(K8).S0
D604	8-719-073-01	DIODE MA111-(K8).S0
D608	8-719-073-01	DIODE MA111-(K8).S0
D609	8-719-073-28	DIODE MA729-(K8).S0
D610	8-719-073-02	DIODE MA728-(K8).S0
D614	8-719-073-02	DIODE MA728-(K8).S0
D615	8-719-073-02	DIODE MA728-(K8).S0
D910	8-719-062-16	DIODE 01ZA8.2(TPL3)
D911	8-719-073-03	DIODE MA8082-(K8).S0

< FERRITE BEAD >

FB002	1-414-229-11	INDUCTOR CHIP 0UH
FB004	1-414-229-11	INDUCTOR CHIP 0UH
FB151	1-500-329-11	INDUCTOR CHIP 0UH
FB152	1-414-921-11	INDUCTOR CHIP 0UH
FB201	1-500-329-11	INDUCTOR CHIP 0UH
FB202	1-500-329-11	INDUCTOR CHIP 0UH
FB203	1-500-329-11	INDUCTOR CHIP 0UH
FB204	1-500-329-11	INDUCTOR CHIP 0UH
FB205	1-500-329-11	INDUCTOR CHIP 0UH
FB206	1-414-228-11	INDUCTOR CHIP 0UH

Ref. No.	Part No.	Description	Remarks
FB402	1-500-329-11	INDUCTOR CHIP 0UH	
FB501	1-500-329-11	INDUCTOR CHIP 0UH	
FB503	1-500-284-21	INDUCTOR CHIP 0UH	
FB504	1-500-284-21	INDUCTOR CHIP 0UH	
FB506	1-500-329-11	INDUCTOR CHIP 0UH	
FB602	1-500-329-11	INDUCTOR CHIP 0UH	
		< IC >	
IC001	8-752-075-31	IC CXA2012R-T4	
IC151	8-752-075-46	IC CXA2030R-T6	
IC152	8-759-169-02	IC MB88344BPFV-G-BND-ER	
IC201	8-759-494-73	IC MB90097PFV-G-104-ER	
IC202	8-759-578-34	IC MB87F4090PFF-G-BND	
IC204	8-752-390-53	IC CXD3131R-T6	
IC301	8-752-089-62	IC CXA2087R-T6	
IC371	8-759-494-52	IC BA7783FS-E2	
IC401	8-759-445-94	IC AK6480AM-E2	
IC402	8-759-566-89	IC MB91191PFF-G-123-BND-ER	
IC501	8-752-386-72	IC CXD2444R-T4	
IC502	8-759-570-81	IC AD9808AJSTRL	
IC551	8-759-444-87	IC NJM324V(TE2)	
IC552	8-759-492-31	IC MPC17A134VMEL	
IC602	8-759-424-79	IC S-8423YFS-T2	
IC603	8-759-536-72	IC TL1596CPWR	
IC604	8-759-566-92	IC S579294PZ-TB	
IC751	8-759-498-52	IC LA9511W-TBM	
IC801	8-759-327-67	IC LB1950V-TLM	
IC802	8-759-327-62	IC TA8482FN-EL	
		< COIL >	
L001	1-414-406-11	INDUCTOR 220uH	
L002	1-412-952-11	INDUCTOR 12uH	
L003	1-414-406-11	INDUCTOR 220uH	
L004	1-414-755-11	INDUCTOR 22uH	
L005	1-412-279-31	INDUCTOR 270uH	
L006	1-412-963-11	INDUCTOR 100uH	
L008	1-412-280-31	INDUCTOR 330uH	
L009	1-410-656-11	INDUCTOR CHIP 150uH	
L010	1-410-657-21	INDUCTOR CHIP 180uH	
L011	1-412-956-21	INDUCTOR 27uH	
L012	1-412-955-11	INDUCTOR 22uH	
L013	1-412-944-11	INDUCTOR 2.7uH	
L015	1-412-951-11	INDUCTOR 10uH	
L016	1-412-946-11	INDUCTOR 3.9uH	
L017	1-414-754-11	INDUCTOR 10uH	
L018	1-410-656-11	INDUCTOR CHIP 150uH	
L019	1-412-957-11	INDUCTOR 33uH	
L020	1-414-406-11	INDUCTOR 220uH	
L152	1-412-939-11	INDUCTOR 1uH	
L153	1-414-754-11	INDUCTOR 10uH	
L154	1-414-754-11	INDUCTOR 10uH	
L155	1-414-754-11	INDUCTOR 10uH	
L156	1-414-754-11	INDUCTOR 10uH	
L201	1-414-754-11	INDUCTOR 10uH	
L202	1-414-754-11	INDUCTOR 10uH	
L203	1-414-754-11	INDUCTOR 10uH	
L204	1-410-658-31	INDUCTOR CHIP 220uH	
L205	1-412-955-11	INDUCTOR 22uH	
L206	1-412-945-11	INDUCTOR 3.3uH	
L207	1-414-754-11	INDUCTOR 10uH	
L209	1-414-754-11	INDUCTOR 10uH	
L501	1-414-398-11	INDUCTOR 10uH	
L502	1-412-955-11	INDUCTOR 22uH	
L552	1-414-398-11	INDUCTOR 10uH	
L553	1-414-754-11	INDUCTOR 10uH	
L555	1-414-754-11	INDUCTOR 10uH	
L751	1-412-948-11	INDUCTOR 5.6uH	
L752	1-412-957-11	INDUCTOR 33uH	
L753	1-412-957-11	INDUCTOR 33uH	
		< TRANSISTOR >	
Q001	8-729-047-19	TRANSISTOR 2SA1965-S-TL	
Q002	8-729-037-53	TRANSISTOR 2SA1832F-Y/GR(TPL3)	
Q003	8-729-037-53	TRANSISTOR 2SA1832F-Y/GR(TPL3)	
Q012	8-729-037-52	TRANSISTOR 2SC4738F-Y/GR(TPL3)	
Q017	8-729-037-52	TRANSISTOR 2SC4738F-Y/GR(TPL3)	
Q019	8-729-042-29	TRANSISTOR RN1104F(TPL3)	
Q020	8-729-037-52	TRANSISTOR 2SC4738F-Y/GR(TPL3)	
Q021	8-729-037-52	TRANSISTOR 2SC4738F-Y/GR(TPL3)	
Q023	8-729-037-52	TRANSISTOR 2SC4738F-Y/GR(TPL3)	
Q024	8-729-037-52	TRANSISTOR 2SC4738F-Y/GR(TPL3)	
Q025	8-729-037-89	TRANSISTOR 2SC4627J-C(K8).S0	
Q026	8-729-047-19	TRANSISTOR 2SA1965-S-TL	
Q027	8-729-037-53	TRANSISTOR 2SA1832F-Y/GR(TPL3)	
Q028	8-729-042-29	TRANSISTOR RN1104F(TPL3)	
Q029	8-729-037-53	TRANSISTOR 2SA1832F-Y/GR(TPL3)	
Q030	8-729-037-53	TRANSISTOR 2SA1832F-Y/GR(TPL3)	
Q032	8-729-037-53	TRANSISTOR 2SA1832F-Y/GR(TPL3)	
Q033	8-729-047-19	TRANSISTOR 2SA1965-S-TL	
Q034	8-729-037-53	TRANSISTOR 2SA1832F-Y/GR(TPL3)	
Q036	8-729-037-89	TRANSISTOR 2SC4627J-C(K8).S0	
Q038	8-729-042-29	TRANSISTOR RN1104F(TPL3)	
Q039	8-729-037-52	TRANSISTOR 2SC4738F-Y/GR(TPL3)	
Q040	8-729-042-29	TRANSISTOR RN1104F(TPL3)	
Q041	8-729-230-72	TRANSISTOR 2SA1362-YG-EL	
Q042	8-729-042-29	TRANSISTOR RN1104F(TPL3)	
Q043	8-729-047-19	TRANSISTOR 2SA1965-S-TL	
Q044	8-729-042-29	TRANSISTOR RN1104F(TPL3)	
Q044	8-729-037-74	TRANSISTOR UN9213J-(K8).SO	
Q045	8-729-037-52	TRANSISTOR 2SC4738F-Y/GR(TPL3)	
Q151	8-729-037-61	TRANSISTOR RN2104F(TPL3)	
Q153	8-729-040-77	TRANSISTOR 2SC5376-B(TE85L)	
Q154	8-729-040-77	TRANSISTOR 2SC5376-B(TE85L)	
Q156	8-729-040-77	TRANSISTOR 2SC5376-B(TE85L)	
Q202	8-729-037-52	TRANSISTOR 2SC4738F-Y/GR(TPL3)	
Q203	8-729-037-53	TRANSISTOR 2SA1832F-Y/GR(TPL3)	
Q204	8-729-037-52	TRANSISTOR 2SC4738F-Y/GR(TPL3)	
Q205	8-729-042-29	TRANSISTOR RN1104F(TPL3)	
Q208	8-729-042-29	TRANSISTOR RN1104F(TPL3)	
Q213	8-729-037-52	TRANSISTOR 2SC4738F-Y/GR(TPL3)	
Q214	8-729-037-52	TRANSISTOR 2SC4738F-Y/GR(TPL3)	

Ref. No.	Part No.	Description		Remarks
Q215	8-729-037-52	TRANSISTOR	2SC4738F-Y/GR(TPL3)	
Q217	8-729-037-53	TRANSISTOR	2SA1832F-Y/GR(TPL3)	
Q301	8-729-045-78	TRANSISTOR	RN1110F(TPL3)	
Q302	8-729-045-78	TRANSISTOR	RN1110F(TPL3)	
Q305	8-729-037-63	TRANSISTOR	UN9115J-(K8).SO	
Q306	8-729-037-76	TRANSISTOR	UN9215J-(K8).SO	
Q307	8-729-037-76	TRANSISTOR	UN9215J-(K8).SO	
Q308	8-729-037-61	TRANSISTOR	RN2104F(TPL3)	
Q309	8-729-042-29	TRANSISTOR	RN1104F(TPL3)	
Q371	8-729-045-78	TRANSISTOR	RN1110F(TPL3)	
Q372	8-729-045-78	TRANSISTOR	UN9216J-(K8).SO	
Q501	8-729-037-53	TRANSISTOR	2SA1832F-Y/GR(TPL3)	
Q551	8-729-037-53	TRANSISTOR	2SA1832F-Y/GR(TPL3)	
Q552	8-729-037-52	TRANSISTOR	2SC4738F-Y/GR(TPL3)	
Q553	8-729-037-52	TRANSISTOR	2SC4738F-Y/GR(TPL3)	
Q554	8-729-037-53	TRANSISTOR	2SA1832F-Y/GR(TPL3)	
Q607	8-729-041-43	TRANSISTOR	HN1L02FU(TE85R)	
Q608	8-729-037-52	TRANSISTOR	2SC4738F-Y/GR(TPL3)	
Q609	8-729-037-52	TRANSISTOR	2SC4738F-Y/GR(TPL3)	
Q610	8-729-042-29	TRANSISTOR	RN1104F(TPL3)	
Q611	8-729-042-29	TRANSISTOR	RN1104F(TPL3)	
Q619	8-729-037-53	TRANSISTOR	2SA1832F-Y/GR(TPL3)	
Q620	8-729-042-58	TRANSISTOR	UN9111J-(K8).SO	
Q802	8-729-042-29	TRANSISTOR	UN9213J-(K8).SO	
Q803	8-729-042-29	TRANSISTOR	RN1104F(TPL3)	
Q804	8-729-037-53	TRANSISTOR	2SA1832F-Y/GR(TPL3)	
Q805	8-729-037-53	TRANSISTOR	2SA1832F-Y/GR(TPL3)	
Q806	8-729-037-52	TRANSISTOR	2SC4738F-Y/GR(TPL3)	

< RESISTOR >

Ref. No.	Part No.	Description			Remarks
R003	1-216-806-11	RES,CHIP	56	5%	1/16W
R004	1-216-818-11	METAL CHIP	560	5%	1/16W
R005	1-216-809-11	METAL CHIP	100	5%	1/16W
R006	1-216-825-11	METAL CHIP	2.2K	5%	1/16W
R007	1-216-829-11	METAL CHIP	4.7K	5%	1/16W
R008	1-216-814-11	METAL CHIP	270	5%	1/16W
R009	1-216-813-11	METAL CHIP	220	5%	1/16W
R014	1-216-837-11	METAL CHIP	22K	5%	1/16W
R015	1-216-839-11	METAL CHIP	33K	5%	1/16W
R020	1-216-837-11	METAL CHIP	22K	5%	1/16W
R021	1-216-837-11	METAL CHIP	22K	5%	1/16W
R023	1-216-822-11	METAL CHIP	1.2K	5%	1/16W
R025	1-216-822-11	METAL CHIP	1.2K	5%	1/16W
R027	1-216-815-11	METAL CHIP	330	5%	1/16W
R029	1-216-837-11	METAL CHIP	22K	5%	1/16W
R031	1-216-837-11	METAL CHIP	22K	5%	1/16W
R032	1-216-815-11	METAL CHIP	330	5%	1/16W
R034	1-216-864-11	METAL CHIP	0	5%	1/16W
R035	1-216-841-11	METAL CHIP	47K	5%	1/16W
R037	1-216-824-11	METAL CHIP	1.8K	5%	1/16W
R038	1-216-841-11	METAL CHIP	47K	5%	1/16W
R039	1-216-824-11	METAL CHIP	1.8K	5%	1/16W
R040	1-216-864-11	METAL CHIP	0	5%	1/16W
R043	1-216-833-11	METAL CHIP	10K	5%	1/16W
R044	1-216-833-11	METAL CHIP	10K	5%	1/16W
R045	1-216-845-11	METAL CHIP	100K	5%	1/16W
R046	1-216-821-11	METAL CHIP	1K	5%	1/16W
R047	1-216-864-11	METAL CHIP	0	5%	1/16W
R048	1-216-864-11	METAL CHIP	0	5%	1/16W
R049	1-216-833-11	METAL CHIP	10K	5%	1/16W
R050	1-216-837-11	METAL CHIP	22K	5%	1/16W
R051	1-216-825-11	METAL CHIP	2.2K	5%	1/16W
R052	1-216-832-11	METAL CHIP	8.2K	5%	1/16W
R053	1-216-833-11	METAL CHIP	10K	5%	1/16W
R054	1-216-828-11	METAL CHIP	3.9K	5%	1/16W
R055	1-216-833-11	METAL CHIP	10K	5%	1/16W
R056	1-216-853-11	METAL CHIP	470K	5%	1/16W
R057	1-216-864-11	METAL CHIP	0	5%	1/16W
R058	1-216-853-11	METAL CHIP	470K	5%	1/16W
R059	1-216-818-11	METAL CHIP	560	5%	1/16W
R060	1-216-821-11	METAL CHIP	1K	5%	1/16W
R062	1-216-821-11	METAL CHIP	1K	5%	1/16W
R063	1-216-818-11	METAL CHIP	560	5%	1/16W
R066	1-216-825-11	METAL CHIP	2.2K	5%	1/16W
R067	1-216-817-11	METAL CHIP	470	5%	1/16W
R068	1-216-817-11	METAL CHIP	470	5%	1/16W
R069	1-216-864-11	METAL CHIP	0	5%	1/16W
R071	1-216-864-11	METAL CHIP	0	5%	1/16W
R072	1-216-864-11	METAL CHIP	0	5%	1/16W
R073	1-216-821-11	METAL CHIP	1K	5%	1/16W
R074	1-216-816-11	METAL CHIP	390	5%	1/16W
R075	1-216-817-11	METAL CHIP	470	5%	1/16W
R076	1-216-816-11	METAL CHIP	390	5%	1/16W
R078	1-216-815-11	METAL CHIP	330	5%	1/16W
R079	1-216-815-11	METAL CHIP	330	5%	1/16W
R080	1-216-813-11	METAL CHIP	220	5%	1/16W
R081	1-216-826-11	METAL CHIP	2.7K	5%	1/16W
R082	1-216-822-11	METAL CHIP	1.2K	5%	1/16W
R083	1-216-820-11	METAL CHIP	820	5%	1/16W
R084	1-216-833-11	METAL CHIP	10K	5%	1/16W
R085	1-216-833-11	METAL CHIP	10K	5%	1/16W
R087	1-216-821-11	METAL CHIP	1K	5%	1/16W
R092	1-216-809-11	METAL CHIP	100	5%	1/16W
R093	1-216-833-11	METAL CHIP	10K	5%	1/16W
R094	1-216-815-11	METAL CHIP	330	5%	1/16W
R095	1-216-839-11	METAL CHIP	33K	5%	1/16W
R096	1-216-813-11	METAL CHIP	220	5%	1/16W
R098	1-216-817-11	METAL CHIP	470	5%	1/16W
R099	1-216-817-11	METAL CHIP	470	5%	1/16W
R101	1-216-837-11	METAL CHIP	22K	5%	1/16W
R102	1-216-834-11	METAL CHIP	12K	5%	1/16W
R103	1-216-816-11	METAL CHIP	390	5%	1/16W
R104	1-216-828-11	METAL CHIP	3.9K	5%	1/16W
R105	1-216-819-11	METAL CHIP	680	5%	1/16W
R106	1-216-823-11	METAL CHIP	1.5K	5%	1/16W
R107	1-216-833-11	METAL CHIP	10K	5%	1/16W
R109	1-216-829-11	METAL CHIP	4.7K	5%	1/16W
R110	1-216-829-11	METAL CHIP	4.7K	5%	1/16W
R112	1-216-833-11	METAL CHIP	10K	5%	1/16W
R113	1-216-825-11	METAL CHIP	2.2K	5%	1/16W

VC-214

Ref. No.	Part No.	Description			Remarks
R152	1-216-822-11	METAL CHIP	1.2K	5%	1/16W
R154	1-216-822-11	METAL CHIP	1.2K	5%	1/16W
R157	1-216-822-11	METAL CHIP	1.2K	5%	1/16W
R161	1-216-804-11	METAL CHIP	39	5%	1/16W
R162	1-216-803-11	METAL CHIP	33	5%	1/16W
R165	1-216-803-11	METAL CHIP	33	5%	1/16W
R166	1-216-804-11	METAL CHIP	39	5%	1/16W
R167	1-216-803-11	METAL CHIP	33	5%	1/16W
R170	1-216-804-11	METAL CHIP	39	5%	1/16W
R175	1-216-837-11	METAL CHIP	22K	5%	1/16W
R176	1-216-837-11	METAL CHIP	22K	5%	1/16W
R177	1-216-821-11	METAL CHIP	1K	5%	1/16W
R178	1-216-821-11	METAL CHIP	1K	5%	1/16W
R179	1-216-815-11	METAL CHIP	330	5%	1/16W
R180	1-216-815-11	METAL CHIP	330	5%	1/16W
R183	1-218-876-11	RES,CHIP	16K	0.50%	1/16W
R184	1-218-847-11	RES,CHIP	1K	0.50%	1/16W
R202	1-216-833-11	METAL CHIP	10K	5%	1/16W
R203	1-216-814-11	METAL CHIP	270	5%	1/16W
R205	1-216-835-11	METAL CHIP	15K	5%	1/16W
R206	1-216-827-11	METAL CHIP	3.3K	5%	1/16W
R208	1-216-827-11	METAL CHIP	3.3K	5%	1/16W
R210	1-216-809-11	METAL CHIP	100	5%	1/16W
R211	1-216-830-11	METAL CHIP	5.6K	5%	1/16W
R212	1-216-825-11	METAL CHIP	2.2K	5%	1/16W
R214	1-216-823-11	METAL CHIP	1.5K	5%	1/16W
R215	1-216-822-11	METAL CHIP	1.2K	5%	1/16W
R216	1-216-811-11	METAL CHIP	150	5%	1/16W
R218	1-216-826-11	METAL CHIP	2.7K	5%	1/16W
R219	1-216-826-11	METAL CHIP	2.7K	5%	1/16W
R220	1-216-815-11	METAL CHIP	330	5%	1/16W
R223	1-216-821-11	METAL CHIP	1K	5%	1/16W
R224	1-216-831-11	METAL CHIP	6.8K	5%	1/16W
R225	1-216-826-11	METAL CHIP	2.7K	5%	1/16W
R226	1-216-820-11	METAL CHIP	820	5%	1/16W
R227	1-216-811-11	METAL CHIP	150	5%	1/16W
R228	1-216-813-11	METAL CHIP	220	5%	1/16W
R229	1-216-805-11	METAL CHIP	47	5%	1/16W
R230	1-216-812-11	METAL CHIP	180	5%	1/16W
R231	1-216-812-11	METAL CHIP	180	5%	1/16W
R232	1-216-815-11	METAL CHIP	330	5%	1/16W
R233	1-216-824-11	METAL CHIP	1.8K	5%	1/16W
R234	1-216-832-11	METAL CHIP	8.2K	5%	1/16W
R236	1-216-825-11	METAL CHIP	2.2K	5%	1/16W
R237	1-216-825-11	METAL CHIP	2.2K	5%	1/16W
R238	1-216-832-11	METAL CHIP	8.2K	5%	1/16W
R239	1-216-827-11	METAL CHIP	3.3K	5%	1/16W
R240	1-216-857-11	METAL CHIP	1M	5%	1/16W
R241	1-216-828-11	METAL CHIP	3.9K	5%	1/16W
R242	1-216-845-11	METAL CHIP	100K	5%	1/16W
R243	1-216-845-11	METAL CHIP	100K	5%	1/16W
R244	1-216-845-11	METAL CHIP	100K	5%	1/16W
R245	1-216-840-11	METAL CHIP	39K	5%	1/16W
R246	1-216-835-11	METAL CHIP	15K	5%	1/16W
R247	1-216-817-11	METAL CHIP	470	5%	1/16W

Ref. No.	Part No.	Description			Remarks
R248	1-216-822-11	METAL CHIP	1.2K	5%	1/16W
R249	1-216-833-11	METAL CHIP	10K	5%	1/16W
R250	1-216-864-11	METAL CHIP	0	5%	1/16W
R251	1-216-833-11	METAL CHIP	10K	5%	1/16W
R252	1-216-821-11	METAL CHIP	1K	5%	1/16W
R253	1-216-845-11	METAL CHIP	100K	5%	1/16W
R255	1-216-833-11	METAL CHIP	10K	5%	1/16W
R257	1-216-295-91	SHORT	0		
R302	1-216-817-11	METAL CHIP	470	5%	1/16W
R303	1-216-817-11	METAL CHIP	470	5%	1/16W
R304	1-216-817-11	METAL CHIP	470	5%	1/16W
R305	1-216-817-11	METAL CHIP	470	5%	1/16W
R311	1-216-841-11	METAL CHIP	47K	5%	1/16W
R314	1-216-823-11	METAL CHIP	1.5K	5%	1/16W
R315	1-216-823-11	METAL CHIP	1.5K	5%	1/16W
R316	1-216-841-11	METAL CHIP	47K	5%	1/16W
R317	1-216-847-11	METAL CHIP	150K	5%	1/16W
R318	1-216-853-11	METAL CHIP	470K	5%	1/16W
R319	1-216-853-11	METAL CHIP	470K	5%	1/16W
R320	1-216-845-11	METAL CHIP	100K	5%	1/16W
R321	1-216-864-11	METAL CHIP	0	5%	1/16W
R322	1-216-845-11	METAL CHIP	100K	5%	1/16W
R325	1-218-895-11	RES,CHIP	100K	0.50%	1/16W
R331	1-216-820-11	METAL CHIP	820	5%	1/16W
R350	1-216-864-11	METAL CHIP	0	5%	1/16W
R373	1-216-809-11	METAL CHIP	100	5%	1/16W
R374	1-216-809-11	METAL CHIP	100	5%	1/16W
R375	1-216-834-11	METAL CHIP	12K	5%	1/16W
R376	1-216-834-11	METAL CHIP	12K	5%	1/16W
R377	1-216-834-11	METAL CHIP	12K	5%	1/16W
R378	1-216-825-11	METAL CHIP	2.2K	5%	1/16W
R379	1-216-852-11	METAL CHIP	390K	5%	1/16W
R382	1-216-837-11	METAL CHIP	22K	5%	1/16W
R383	1-216-837-11	METAL CHIP	22K	5%	1/16W
R384	1-216-829-11	METAL CHIP	4.7K	5%	1/16W
R385	1-216-826-11	METAL CHIP	2.7K	5%	1/16W
R386	1-216-849-11	METAL CHIP	220K	5%	1/16W
R402	1-216-821-11	METAL CHIP	1K	5%	1/16W
R403	1-216-845-11	METAL CHIP	100K	5%	1/16W
R405	1-216-845-11	METAL CHIP	100K	5%	1/16W
R406	1-216-845-11	METAL CHIP	100K	5%	1/16W
R407	1-216-845-11	METAL CHIP	100K	5%	1/16W
R408	1-216-854-11	METAL CHIP	560K	5%	1/16W
R409	1-216-845-11	METAL CHIP	100K	5%	1/16W
R410	1-216-829-11	METAL CHIP	4.7K	5%	1/16W
R412	1-216-829-11	METAL CHIP	4.7K	5%	1/16W
R414	1-216-829-11	METAL CHIP	4.7K	5%	1/16W
R415	1-216-821-11	METAL CHIP	1K	5%	1/16W
R416	1-216-864-11	METAL CHIP	0	5%	1/16W
R419	1-216-839-11	METAL CHIP	33K	5%	1/16W
R420	1-216-833-11	METAL CHIP	10K	5%	1/16W
R421	1-216-833-11	METAL CHIP	10K	5%	1/16W
R424	1-216-841-11	METAL CHIP	47K	5%	1/16W
R426	1-216-825-11	METAL CHIP	2.2K	5%	1/16W
R427	1-216-841-11	METAL CHIP	47K	5%	1/16W

Ref. No.	Part No.	Description			Remarks
R428	1-216-841-11	METAL CHIP	47K	5%	1/16W
R429	1-216-811-11	METAL CHIP	150	5%	1/16W
R430	1-216-813-11	METAL CHIP	220	5%	1/16W
R431	1-216-825-11	METAL CHIP	2.2K	5%	1/16W
R432	1-216-845-11	METAL CHIP	100K	5%	1/16W
R433	1-216-845-11	METAL CHIP	100K	5%	1/16W
R434	1-216-853-11	METAL CHIP	470K	5%	1/16W
R435	1-216-853-11	METAL CHIP	470K	5%	1/16W
R436	1-216-845-11	METAL CHIP	100K	5%	1/16W
R437	1-216-845-11	METAL CHIP	100K	5%	1/16W
R440	1-216-841-11	METAL CHIP	47K	5%	1/16W
R441	1-216-845-11	METAL CHIP	100K	5%	1/16W
R502	1-216-864-11	METAL CHIP	0	5%	1/16W
R503	1-216-864-11	METAL CHIP	0	5%	1/16W
R504	1-216-845-11	METAL CHIP	100K	5%	1/16W
R508	1-216-809-11	METAL CHIP	100	5%	1/16W
R510	1-216-809-11	METAL CHIP	100	5%	1/16W
R512	1-216-853-11	METAL CHIP	470K	5%	1/16W
R513	1-216-825-11	METAL CHIP	2.2K	5%	1/16W
R514	1-216-821-11	METAL CHIP	1K	5%	1/16W
R515	1-216-864-11	METAL CHIP	0	5%	1/16W
R522	1-216-864-11	METAL CHIP	0	5%	1/16W
R525	1-216-864-11	METAL CHIP	0	5%	1/16W
R526	1-216-864-11	METAL CHIP	0	5%	1/16W
R527	1-216-864-11	METAL CHIP	0	5%	1/16W
R530	1-216-857-11	METAL CHIP	1M	5%	1/16W
R532	1-216-864-11	METAL CHIP	0	5%	1/16W
R551	1-216-841-11	METAL CHIP	47K	5%	1/16W
R554	1-216-843-11	METAL CHIP	68K	5%	1/16W
R555	1-216-829-11	METAL CHIP	4.7K	5%	1/16W
R556	1-216-797-11	METAL CHIP	10	5%	1/16W
R557	1-216-843-11	METAL CHIP	68K	5%	1/16W
R558	1-216-295-91	SHORT	0		
R560	1-216-821-11	METAL CHIP	1K	5%	1/16W
R561	1-216-853-11	METAL CHIP	470K	5%	1/16W
R562	1-216-849-11	METAL CHIP	220K	5%	1/16W
R563	1-216-853-11	METAL CHIP	470K	5%	1/16W
R564	1-216-853-11	METAL CHIP	470K	5%	1/16W
R565	1-216-833-11	METAL CHIP	10K	5%	1/16W
R566	1-216-835-11	METAL CHIP	15K	5%	1/16W
R567	1-216-825-11	METAL CHIP	2.2K	5%	1/16W
R568	1-216-857-11	METAL CHIP	1M	5%	1/16W
R569	1-216-825-11	METAL CHIP	2.2K	5%	1/16W
R570	1-216-841-11	METAL CHIP	47K	5%	1/16W
R571	1-216-837-11	METAL CHIP	22K	5%	1/16W
R572	1-216-837-11	METAL CHIP	22K	5%	1/16W
R573	1-216-815-11	METAL CHIP	330	5%	1/16W
R574	1-216-821-11	METAL CHIP	1K	5%	1/16W
R575	1-216-821-11	METAL CHIP	1K	5%	1/16W
R576	1-216-821-11	METAL CHIP	1K	5%	1/16W
R577	1-216-833-11	METAL CHIP	10K	5%	1/16W
R579	1-216-821-11	METAL CHIP	1K	5%	1/16W
R583	1-216-829-11	METAL CHIP	4.7K	5%	1/16W
R603	1-216-845-11	METAL CHIP	100K	5%	1/16W
R604	1-216-813-11	METAL CHIP	220	5%	1/16W
R605	1-216-841-11	METAL CHIP	47K	5%	1/16W
R606	1-216-829-11	METAL CHIP	4.7K	5%	1/16W
R607	1-216-857-11	METAL CHIP	1M	5%	1/16W
R608	1-216-845-11	METAL CHIP	100K	5%	1/16W
R610	1-216-821-11	METAL CHIP	1K	5%	1/16W
R611	1-216-825-11	METAL CHIP	2.2K	5%	1/16W
R612	1-216-853-11	METAL CHIP	470K	5%	1/16W
R613	1-216-821-11	METAL CHIP	1K	5%	1/16W
R614	1-216-821-11	METAL CHIP	1K	5%	1/16W
R618	1-216-853-11	METAL CHIP	470K	5%	1/16W
R619	1-216-853-11	METAL CHIP	470K	5%	1/16W
R620	1-216-853-11	METAL CHIP	470K	5%	1/16W
R621	1-216-853-11	METAL CHIP	470K	5%	1/16W
R622	1-216-853-11	METAL CHIP	470K	5%	1/16W
R624	1-216-853-11	METAL CHIP	470K	5%	1/16W
R625	1-216-845-11	METAL CHIP	100K	5%	1/16W
R627	1-216-853-11	METAL CHIP	470K	5%	1/16W
R628	1-216-841-11	METAL CHIP	47K	5%	1/16W
R629	1-216-833-11	METAL CHIP	10K	5%	1/16W
R630	1-216-826-11	METAL CHIP	2.7K	5%	1/16W
R631	1-216-845-11	METAL CHIP	100K	5%	1/16W
R632	1-216-857-11	METAL CHIP	1M	5%	1/16W
R633	1-218-911-11	RES,CHIP	470K	0.50%	1/16W
R634	1-218-911-11	RES,CHIP	470K	0.50%	1/16W
R635	1-216-857-11	METAL CHIP	1M	5%	1/16W
R636	1-216-857-11	METAL CHIP	1M	5%	1/16W
R637	1-216-845-11	METAL CHIP	100K	5%	1/16W
R638	1-216-845-11	METAL CHIP	100K	5%	1/16W
R639	1-216-845-11	METAL CHIP	100K	5%	1/16W
R640	1-216-845-11	METAL CHIP	100K	5%	1/16W
R641	1-216-845-11	METAL CHIP	100K	5%	1/16W
R642	1-216-821-11	METAL CHIP	1K	5%	1/16W
R643	1-216-857-11	METAL CHIP	1M	5%	1/16W
R644	1-216-841-11	METAL CHIP	47K	5%	1/16W
R645	1-216-845-11	METAL CHIP	100K	5%	1/16W
R646	1-216-853-11	METAL CHIP	470K	5%	1/16W
R647	1-216-853-11	METAL CHIP	470K	5%	1/16W
R648	1-216-853-11	METAL CHIP	470K	5%	1/16W
R649	1-216-857-11	METAL CHIP	1M	5%	1/16W
R650	1-219-570-11	RES,CHIP	10M	5%	1/16W
R651	1-216-845-11	METAL CHIP	100K	5%	1/16W
R652	1-216-853-11	METAL CHIP	470K	5%	1/16W
R653	1-216-853-11	METAL CHIP	470K	5%	1/16W
R654	1-216-817-11	METAL CHIP	470	5%	1/16W
R655	1-216-853-11	METAL CHIP	470K	5%	1/16W
R662	1-216-841-11	METAL CHIP	47K	5%	1/16W
R663	1-216-853-11	METAL CHIP	470K	5%	1/16W
R665	1-216-853-11	METAL CHIP	470K	5%	1/16W
R666	1-216-821-11	METAL CHIP	1K	5%	1/16W
R667	1-216-821-11	METAL CHIP	1K	5%	1/16W
R668	1-216-821-11	METAL CHIP	1K	5%	1/16W
R669	1-216-821-11	METAL CHIP	1K	5%	1/16W
R670	1-216-821-11	METAL CHIP	1K	5%	1/16W
R671	1-216-821-11	METAL CHIP	1K	5%	1/16W
R672	1-216-821-11	METAL CHIP	1K	5%	1/16W

Ref. No.	Part No.	Description			Remarks
R673	1-216-821-11	METAL CHIP	1K	5%	1/16W
R675	1-216-821-11	METAL CHIP	1K	5%	1/16W
R676	1-216-821-11	METAL CHIP	1K	5%	1/16W
R677	1-216-821-11	METAL CHIP	1K	5%	1/16W
R678	1-216-821-11	METAL CHIP	1K	5%	1/16W
R679	1-216-821-11	METAL CHIP	1K	5%	1/16W
R680	1-216-845-11	METAL CHIP	100K	5%	1/16W
R681	1-216-821-11	METAL CHIP	1K	5%	1/16W
R682	1-216-821-11	METAL CHIP	1K	5%	1/16W
R683	1-216-821-11	METAL CHIP	1K	5%	1/16W
R684	1-216-821-11	METAL CHIP	1K	5%	1/16W
R685	1-216-821-11	METAL CHIP	1K	5%	1/16W
R686	1-216-821-11	METAL CHIP	1K	5%	1/16W
R687	1-216-821-11	METAL CHIP	1K	5%	1/16W
R690	1-216-821-11	METAL CHIP	1K	5%	1/16W
R691	1-216-845-11	METAL CHIP	100K	5%	1/16W
R692	1-216-853-11	METAL CHIP	470K	5%	1/16W
R693	1-216-821-11	METAL CHIP	1K	5%	1/16W
R697	1-216-854-11	METAL CHIP	560K	5%	1/16W
R698	1-216-853-11	METAL CHIP	470K	5%	1/16W
R699	1-216-821-11	METAL CHIP	1K	5%	1/16W
R700	1-216-853-11	METAL CHIP	470K	5%	1/16W
R726	1-216-864-11	METAL CHIP	0	5%	1/16W
R752	1-216-841-11	METAL CHIP	47K	5%	1/16W
R753	1-216-841-11	METAL CHIP	47K	5%	1/16W
R755	1-216-837-11	METAL CHIP	22K	5%	1/16W
R756	1-216-829-11	METAL CHIP	4.7K	5%	1/16W
R757	1-216-829-11	METAL CHIP	4.7K	5%	1/16W
R758	1-216-833-11	METAL CHIP	10K	5%	1/16W
R759	1-216-833-11	METAL CHIP	10K	5%	1/16W
R760	1-216-835-11	METAL CHIP	15K	5%	1/16W
R761	1-216-857-11	METAL CHIP	1M	5%	1/16W
R763	1-218-879-11	RES,CHIP	22K	0.50%	1/16W
R764	1-216-815-11	METAL CHIP	330	5%	1/16W
R765	1-216-821-11	METAL CHIP	1K	5%	1/16W
R767	1-216-817-11	METAL CHIP	470	5%	1/16W
R768	1-216-847-11	METAL CHIP	150K	5%	1/16W
R770	1-216-847-11	METAL CHIP	150K	5%	1/16W
R771	1-216-818-11	METAL CHIP	560	5%	1/16W
R772	1-216-831-11	METAL CHIP	6.8K	5%	1/16W
R773	1-216-817-11	METAL CHIP	470	5%	1/16W
R774	1-216-840-11	METAL CHIP	39K	5%	1/16W
R777	1-216-864-11	METAL CHIP	0	5%	1/16W
R801	1-217-671-11	METAL CHIP	1	5%	1/10W
R802	1-217-671-11	METAL CHIP	1	5%	1/10W
R803	1-217-671-11	METAL CHIP	1	5%	1/10W
R804	1-216-833-11	METAL CHIP	10K	5%	1/16W
R805	1-216-833-11	METAL CHIP	10K	5%	1/16W
R806	1-216-833-11	METAL CHIP	10K	5%	1/16W
R807	1-216-808-11	METAL CHIP	82	5%	1/16W
R808	1-216-864-11	METAL CHIP	0	5%	1/16W
R809	1-216-864-11	METAL CHIP	0	5%	1/16W
R810	1-216-853-11	METAL CHIP	470K	5%	1/16W
R811	1-216-853-11	METAL CHIP	470K	5%	1/16W
R812	1-216-853-11	METAL CHIP	470K	5%	1/16W
R813	1-216-851-11	METAL CHIP	330K	5%	1/16W
R814	1-216-845-11	METAL CHIP	100K	5%	1/16W
R815	1-216-841-11	METAL CHIP	47K	5%	1/16W
R816	1-216-833-11	METAL CHIP	10K	5%	1/16W
R817	1-216-833-11	METAL CHIP	10K	5%	1/16W
R818	1-216-841-11	METAL CHIP	47K	5%	1/16W
R819	1-216-829-11	METAL CHIP	4.7K	5%	1/16W
R820	1-216-833-11	METAL CHIP	10K	5%	1/16W
R821	1-216-833-11	METAL CHIP	10K	5%	1/16W
R822	1-216-841-11	METAL CHIP	47K	5%	1/16W
R823	1-216-817-11	METAL CHIP	470	5%	1/16W
R824	1-216-838-11	METAL CHIP	27K	5%	1/16W
R825	1-216-817-11	METAL CHIP	470	5%	1/16W
R826	1-216-864-11	METAL CHIP	0	5%	1/16W
R827	1-216-864-11	METAL CHIP	0	5%	1/16W
R828	1-216-864-11	METAL CHIP	0	5%	1/16W
R829	1-216-864-11	METAL CHIP	0	5%	1/16W
R830	1-216-834-11	METAL CHIP	12K	5%	1/16W
R831	1-216-836-11	METAL CHIP	18K	5%	1/16W
R832	1-217-671-11	METAL CHIP	1	5%	1/10W
R833	1-217-671-11	METAL CHIP	1	5%	1/10W
R834	1-216-845-11	METAL CHIP	100K	5%	1/16W
R835	1-216-827-11	METAL CHIP	3.3K	5%	1/16W
R836	1-216-829-11	METAL CHIP	4.7K	5%	1/16W
R837	1-216-023-00	METAL CHIP	82	5%	1/10W
R917	1-216-837-11	METAL CHIP	22K	5%	1/16W
R918	1-216-845-11	METAL CHIP	100K	5%	1/16W
R919	1-216-842-11	METAL CHIP	56K	5%	1/16W
R920	1-216-843-11	METAL CHIP	68K	5%	1/16W
R921	1-216-845-11	METAL CHIP	100K	5%	1/16W
R922	1-217-671-11	METAL CHIP	1	5%	1/10W
R923	1-217-671-11	METAL CHIP	1	5%	1/10W
R924	1-216-821-11	METAL CHIP	1K	5%	1/16W
R925	1-216-821-11	METAL CHIP	1K	5%	1/16W
R927	1-216-864-11	METAL CHIP	0	5%	1/16W
R928	1-216-821-11	METAL CHIP	1K	5%	1/16W
R929	1-216-864-11	METAL CHIP	0	5%	1/16W

< VIBRATOR >

X151	1-767-028-21	VIBRATOR, CRYSTAL (14.318182MHz)
X401	1-760-655-41	VIBRATOR, CRYSTAL (20MHz)
X501	1-760-320-11	VIBRATOR, CRYSTAL (28.6363MHz)
X601	1-767-450-11	VIBRATOR, CERAMIC (20MHz)
X602	1-760-458-21	VIBRATOR, CRYSTAL (32.798kHz)

	A-7073-838-A	VF-129 (N) BOARD, COMPLETE
		**********

(Ref.No.:3000 Series)

< CAPACITOR >

C901	1-107-854-11	TANTAL. CHIP	68uF	20%	6.3V
C902	1-163-038-91	CERAMIC CHIP	0.1uF		25V
C903	1-135-145-11	TANTALUM CHIP	0.47uF	10%	35V
C904	1-162-965-11	CERAMIC CHIP	0.0015uF	10%	50V
C905	1-104-752-11	TANTAL. CHIP	33uF	20%	6.3V

Ref. No.	Part No.	Description			Remarks
C906	1-162-638-11	CERAMIC CHIP	1uF		16V
C907	1-104-563-11	FILM CHIP	0.1uF	5%	16V
C908	1-162-920-11	CERAMIC CHIP	27PF	5%	50V
C909	1-163-009-11	CERAMIC CHIP	0.001uF	10%	50V
⚠C910	1-162-625-11	CERAMIC CHIP	0.0047uF	5%	50V
⚠C911	1-164-715-11	CERAMIC CHIP	0.0068uF	5%	50V
C912	1-107-854-11	TANTAL. CHIP	68uF	20%	6.3V
C913	1-135-145-11	TANTALUM CHIP	0.47uF	10%	35V
C914	1-107-689-21	TANTAL. CHIP	1uF	20%	35V
C915	1-163-037-11	CERAMIC CHIP	0.022uF	10%	25V
C916	1-164-611-11	CERAMIC CHIP	0.001uF	10%	500V
		< CONNECTOR >			
CN901	1-573-506-41	CONNECTOR, FPC (NON ZIF) 4P			
* CN902	1-580-057-11	PIN, CONNECTOR 4P			
		< DIODE >			
D901	8-719-951-21	DIODE PR1102W-TR			
D903	8-719-073-01	DIODE MA111-(K8).S0			
		< IC >			
IC901	8-759-196-14	IC BA7149F-E2			
		< COIL >			
L901	1-412-031-11	INDUCTOR CHIP 47uH			
L902	1-410-387-11	INDUCTOR CHIP 33uH			
⚠L903	1-411-697-11	COIL, FERRITE (HLC)			
		< TRANSISTOR >			
Q901	8-729-230-63	TRANSISTOR 2SD1819A-QRS-TX			
Q902	8-729-106-68	TRANSISTOR 2SD1615-T1GLGK			
Q903	8-729-216-31	TRANSISTOR 2SA1163G-TE85L			
Q904	8-729-230-63	TRANSISTOR 2SD1819A-QRS-TX			
		< RESISTOR >			
R901	1-216-817-11	METAL CHIP	470	5%	1/16W
R902	1-216-817-11	METAL CHIP	470	5%	1/16W
R903	1-216-057-00	METAL CHIP	2.2K	5%	1/10W
R904	1-216-833-11	METAL CHIP	10K	5%	1/16W
R905	1-216-822-11	METAL CHIP	1.2K	5%	1/16W
R906	1-216-823-11	METAL CHIP	1.5K	5%	1/16W
R907	1-216-845-11	METAL CHIP	100K	5%	1/16W
R908	1-216-852-11	METAL CHIP	390K	5%	1/16W
R909	1-216-833-11	METAL CHIP	10K	5%	1/16W
R910	1-216-835-11	METAL CHIP	15K	5%	1/16W
R911	1-216-160-00	RES,CHIP	27	5%	1/8W
R912	1-216-857-11	METAL CHIP	1M	5%	1/16W
R915	1-218-879-11	RES,CHIP	22K	0.50%	1/16W
R917	1-218-891-11	RES,CHIP	68K	0.50%	1/16W
R918	1-216-829-11	METAL CHIP	4.7K	5%	1/16W
R919	1-216-839-11	METAL CHIP	33K	5%	1/16W
R920	1-216-837-11	METAL CHIP	22K	5%	1/16W
R921	1-216-795-11	RES,CHIP	6.8	5%	1/16W
R922	1-216-850-11	METAL CHIP	270K	5%	1/16W
R923	1-216-857-11	METAL CHIP	1M	5%	1/16W

Ref. No.	Part No.	Description			Remarks
R924	1-216-862-11	RES,CHIP	2.7M	5%	1/16W
R925	1-216-862-11	RES,CHIP	2.7M	5%	1/16W
R926	1-216-821-11	METAL CHIP	1K	5%	1/16W
R927	1-216-821-11	METAL CHIP	1K	5%	1/16W
R928	1-216-827-11	METAL CHIP	3.3K	5%	1/16W
R929	1-216-818-11	METAL CHIP	560	5%	1/16W
R930	1-216-791-11	METAL CHIP	3.3	5%	1/16W
R931	1-217-671-11	METAL CHIP	1	5%	1/10W
R932	1-216-829-11	METAL CHIP	4.7K	5%	1/16W
		< VARIABLE RESISTOR >			
RV903	1-238-852-11	RES, ADJ, CERMET 470			
RV904	1-238-861-11	RES, ADJ, CERMET 470K			
		< TRANSFORMER >			
⚠T901	1-453-124-11	TRANSFORMER ASSY, FLYBACK			
		< FLAT CABLE >			
⚠W901	1-540-019-21	SOCKET ASSY, CRT			
	A-7073-832-A	VL-23 BOARD, COMPLETE **********			
					(Ref.No.:1000 Series)
		< CAPACITOR >			
C151	1-115-566-11	CERAMIC CHIP	4.7uF	10%	10V
C153	1-162-964-11	CERAMIC CHIP	0.001uF	10%	50V
		< CONNECTOR >			
CN151	1-774-633-11	CONNECTOR, FFC/FPC 8P			
		< DIODE >			
D151	8-719-073-01	DIODE MA111-(K8).S0			
		< COIL >			
L151	1-416-344-11	INDUCTOR 10uH			
		< TRANSISTOR >			
Q151	8-729-043-94	TRANSISTOR CPH3106-PM-TL			
Q152	8-729-028-26	TRANSISTOR 2SK1829(TE85L)			
		< RESISTOR >			
R151	1-216-864-11	METAL CHIP	0	5%	1/16W
R152	1-216-813-11	METAL CHIP	220	5%	1/16W
R153	1-216-821-11	METAL CHIP	1K	5%	1/16W
R154	1-216-845-11	METAL CHIP	100K	5%	1/16W

Note :
The components identified by mark ⚠ or dotted line with mark ⚠ are critical for safety.
Replace only with part number specified.

Note :
Les composants identifiés par une marque ⚠ sont critiques pour la sécurité.
Ne les remplacer que par une pièce portant le numéro spécifié.

Ref. No.	Part No.	Description	Remarks
		MISCELLANEOUS	
		**********	
1	1-517-857-11	LIGHT, VIDEO	
15	1-694-384-11	TERMINAL BOARD, BATTERY	
22	1-672-663-21	FP-49 FLEXIBLE BOARD	
23	1-783-240-11	CABLE, FLEXIBLE FLAT (FFC-236)	
25	1-672-670-11	FP-43 FLEXIBLE BOARD	
51	1-475-621-11	SWITCH BLOCK, CONTROL(MR-8500)	
54	1-672-668-21	FP-62 FLEXIBLE BOARD	
102	1-668-963-21	FP-642 FLEXIBLE BOARD	
106	1-959-310-11	HARNESS (DP-74)	
166	1-475-619-11	SWITCH BLOCK, CONTROL(SS-8500)	
171	1-475-618-41	SWITCH BLOCK, CONTROL(FK-8500)	
174	1-672-665-11	FP-54 FLEXIBLE BOARD	
176	1-672-673-11	FP-46 FLEXIBLE BOARD	
182	1-672-671-11	FP-44 FLEXIBLE BOARD	
204	1-790-412-11	CABLE, FLEXIBLE FLAT (FFC-256)	
216	8-848-729-01	DEVICE, LENS LSV-630A	
219	1-758-084-21	FILTER BLOCK, OPTICAL	
760	1-658-213-11	FP-355 FLEXIBLE BOARD	
761	3-965-552-01	HOLDER (T), SENSOR	
762	1-657-786-13	FP-221 FLEXIBLE BOARD	
763	3-965-551-01	HOLDER (S), SENSOR	
764	1-658-214-11	FP-356 FLEXIBLE BOARD	
817	1-657-784-11	FP-220 FLEXIBLE BOARD	
D001	8-719-988-42	DIODE GL453	
IC1401	A-7030-865-A	CCD BLOCK ASSY (CCD IMAGER)	
J001	1-565-276-31	JACK, ULTRA SMALL 1P (LANC)	
LCD901	1-803-356-21	MODULE, CRYSTAL INDICATION	
⚠LED901	1-517-858-11	LIGHT, BACK	
M901	A-7048-897-A	DRUM BLOCK ASSY (DGH-0F0A-R)(NTSC)	
M902	8-835-635-01	MOTOR, DC SCE12A/C-NP (CAPSTAN)	
M903	X-3945-401-1	MOTOR ASSY, DC (LOADING)	
M905	1-763-262-11	MOTOR, FOCUS STEPPING	
M906	1-763-046-11	MOTOR, ZOOM STEPPING	
MIC901	1-542-312-11	MICROPHONE	
MIC902	1-542-312-11	MICROPHONE	
⚠ND901	1-517-751-11	TUBE, FLUORESCENT,COLD CATHODE	
S001	1-692-614-11	SWITCH, PUSH(3 KEY)	(Hi8 MP,ME/MP,REC PROOF)
S002	1-572-688-11	SWITCH, PUSH (1 KEY) (C.C.LOCK)	
S901	1-762-436-15	SWITCH, ROTARY (ENCODER)	(MANUAL FOCUS)
SP901	1-504-753-41	SPEAKER (2.8CM)	
⚠V901	1-452-673-61	CRT ASSY (M01KXX90WB)	

Ref. No.	Part No.	Description	Remarks
		ACCESSORIES	
		**********	
	1-467-574-21	REMOTE COMMANDER (RMT-708)	
⚠	1-475-599-11	ADAPTOR, AC	
	1-569-008-21	ADAPTOR, CONVERSION 2P	(TRV66:E,HK,BR/TRV66PK)
	1-575-334-11	AV CONNECTING CABLE (1.5M)	
⚠	1-769-608-11	CORD, POWER (TRV66:E,BR/TRV66PK)	
⚠	1-783-374-11	CORD, POWER (TRV66:HK)	
⚠	1-790-107-22	CORD, POWER (TRV63/TRV66:US,CND)	
	3-054-045-01	VIDEO, HOW TO TAKE (TRV66:US)	
	3-865-659-11	MANUAL, INSTRUCTION (ENGLISH)	(TRV63/TRV66:US,CND)
	3-865-659-21	MANUAL, INSTRUCTION (FRENCH)	(TRV63/TRV66:CND)
	3-865-659-31	MANUAL, INSTRUCTION (ENGLISH)	(TRV66:E,HK/TRV66PK)
	3-865-659-41	MANUAL, INSTRUCTION	(SPANISH/PORTUGUESE)(TRV66:E,HK/TRV66PK)
	3-865-659-51	MANUAL, INSTRUCTION (CHINESE)	(TRV66:E,HK/TRV66PK)
	3-865-659-61	MANUAL, INSTRUCTION (KOREAN)	(TRV66:E/TRV66PK)
	3-958-131-01	LID, BATTERY CASE (for RMT-708)	
	3-987-015-01	BELT (S), SHOULDER	
	3-988-960-01	BAG (8500), CARRYING (TRV66PK)	
	A-7094-140-A	NP-F330 BATTERY PACK	(TRV63/TRV66:US,CND)
	A-7094-141-A	NP-F330 BATTERY PACK	(TRV66:E,HK,BR/TRV66PK)

Note :	**Note :**
The components identified by mark ⚠ or dotted line with mark ⚠ are critical for safety. Replace only with part number specified.	Les composants identifiés par une marque ⚠ sont critiques pour la sécurité. Ne les remplacer que par une pièce portant le numéro spécifié.

Be sure to read “Precautions upon replacing CCD imager” on page 4-9 when changing the CCD imager.

⟨FOR CAMERA COLOR REPRODUCTION ADJUSTMENT⟩

Take a copy of CAMERA COLOR REPRODUCTION FRAME and Parts referencesheets with a clear sheet for use.

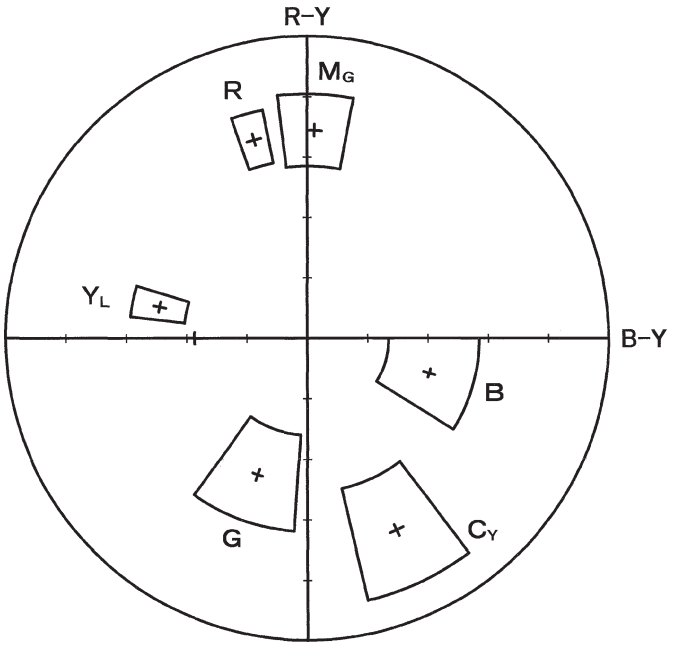

CCD-TRV63/TRV66/TRV66PK

⟨PARTS REFERENCE SHEET⟩

You can find the parts position of location of mount locations applying to VC-214 board of a set.

VC-214 CCD-TRV63/TRV66/TRV66PK SIDE A

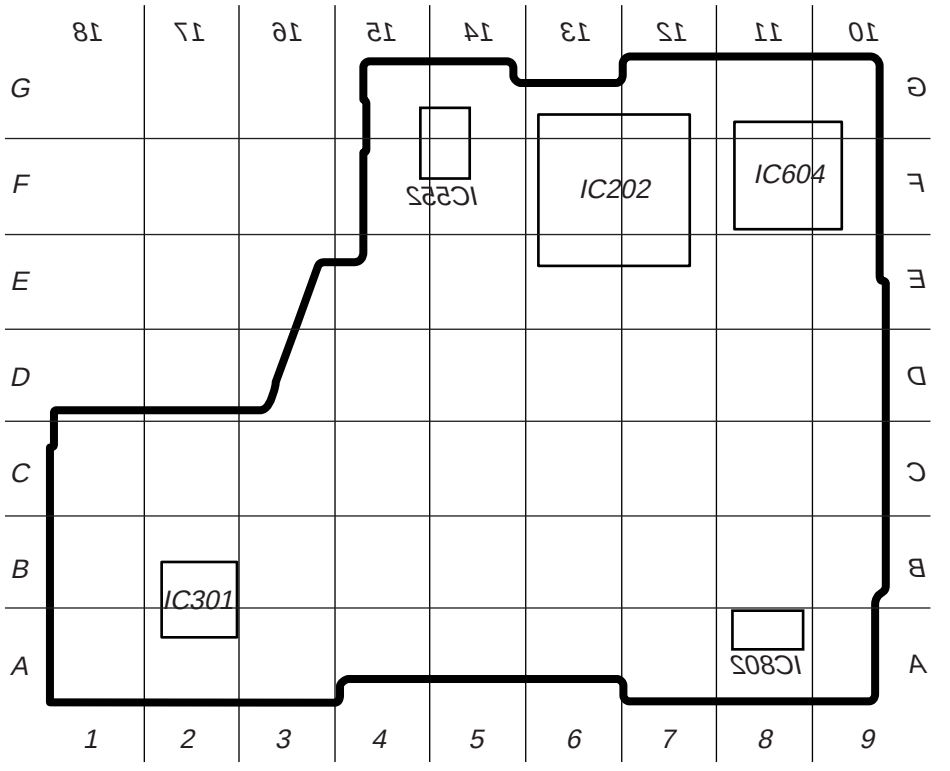

VC-214 CCD-TRV63/TRV66/TRV66PK SIDE B

9-974-126-11

Sony Corporation
Personal A&V Products Company

98L1629-1
Printed in Japan ©1998.12
Published by Quality Engineering Dept.
(Osaki East)